CH-CM0207 Double Servo Automatic CNC Carbide Rod Cut-Off Machine

Operation Manual

Machine Serial No._____

Version V1

Content

2024/03 Version Updated

1 MACHINE DESCRIPTION 5

1.1 Exterior Size 5
1.2 Axis Definition 6
1.3 Base 7
1.4 Environmental 7
1.5 Specification 7
1.6 Movement / Storage 7
1.7 Unboxing 8

2. SAFETY 8

2.1 Dangerous Area 8
2.2 Operating Safety 8
2.3 Safety Equipment 8
2.4 Noise 8
2.5 Caution 9
2.6 Working Area 9
2.7 Qualified Operator 9
2.8 Personal Protected Equipment 10
2.9 Safety Device 10
2.10 Safety Mark 10
2.11 Name Plate 11
2.12 Emergency 11
2.13 Safety Door 12

3. MAIN COMPONENTS 13

3.1 Mechanism 13
3.2 Electric Lubricator and Oil Cycle 14
3.3 Air Pressure Unit 15
3.4 HMI Control Panel and Button 16

4 BASIC OPERATION 17

4.1 Machine Check and Method 17
4.2 Machine Start 17
4.4 Home Position 17
4.6 Program Updating Steps 18
4.6-2 Backup、 Restore 19

5 FUNCTION INTRODUCTION 20

5.1 Main Page <Start Up> 20
5.2 Manual 21

5.2.1 Manual-1 21
5.2.2 Manual-2 22
5.3 PROCESSING PARAMETER 22
5.3.1 Cutting Length Setting Methoid 23
5.3.2 Parameter Save 25
5.3.3 Cut Speed Set 26
5.4 AUTO MODE 27
5.5 WHEEL PROBE 28
5.5.1 Wheel Exchange Steps： 30
5.6 FUNCTION 31
5.7 MACHINE PARAMETER 33
**Note： Cutting Length Offset： 34
6 SIMPLE QUESETION & TROUBLE SHOOTING 36
7 ELECTRICAL SYSTEM 37
7.1 DELTA INVERTER PARAMETER SETTING 37
7.2 CIRCUIT DIAGRAM 38
8. DAILY MAINTAIN 47

Machine Characteristics

- CH-CM0207 processes automatic loading and cutting perfectly. It's applied for the material of tungsten, carbide bar/tube, ceramic, steel etc. It's not applicable for flammable material, such as magnesium, rubber, wood, glass, poisonous material etc.
- Full cover with metal plate to protect operators' safety, also apply for safety certification all over the world.
- Easy set up control panel with dialogue interface and touch screen, highly efficiency cutting operation.
- Auto loading and unloading prevent workpieces from damaging each other.
- Precisely cutting operation.
- To make operator programming easier, digitalize and common touchscreen
- Simple operation screen with digital program to let operator can easily handle the program.
- The function of compensating the wheel outer diameter is to steady and more precisely the cutting result.
- X-Y axis is controlled by servo to ensure the axis' movement precisely.
- High precise spindle of cutting wheel is used.
- Using V block to hold the material to result in perfectly cutting surface.

1 Machine Description

1.1 Exterior Size

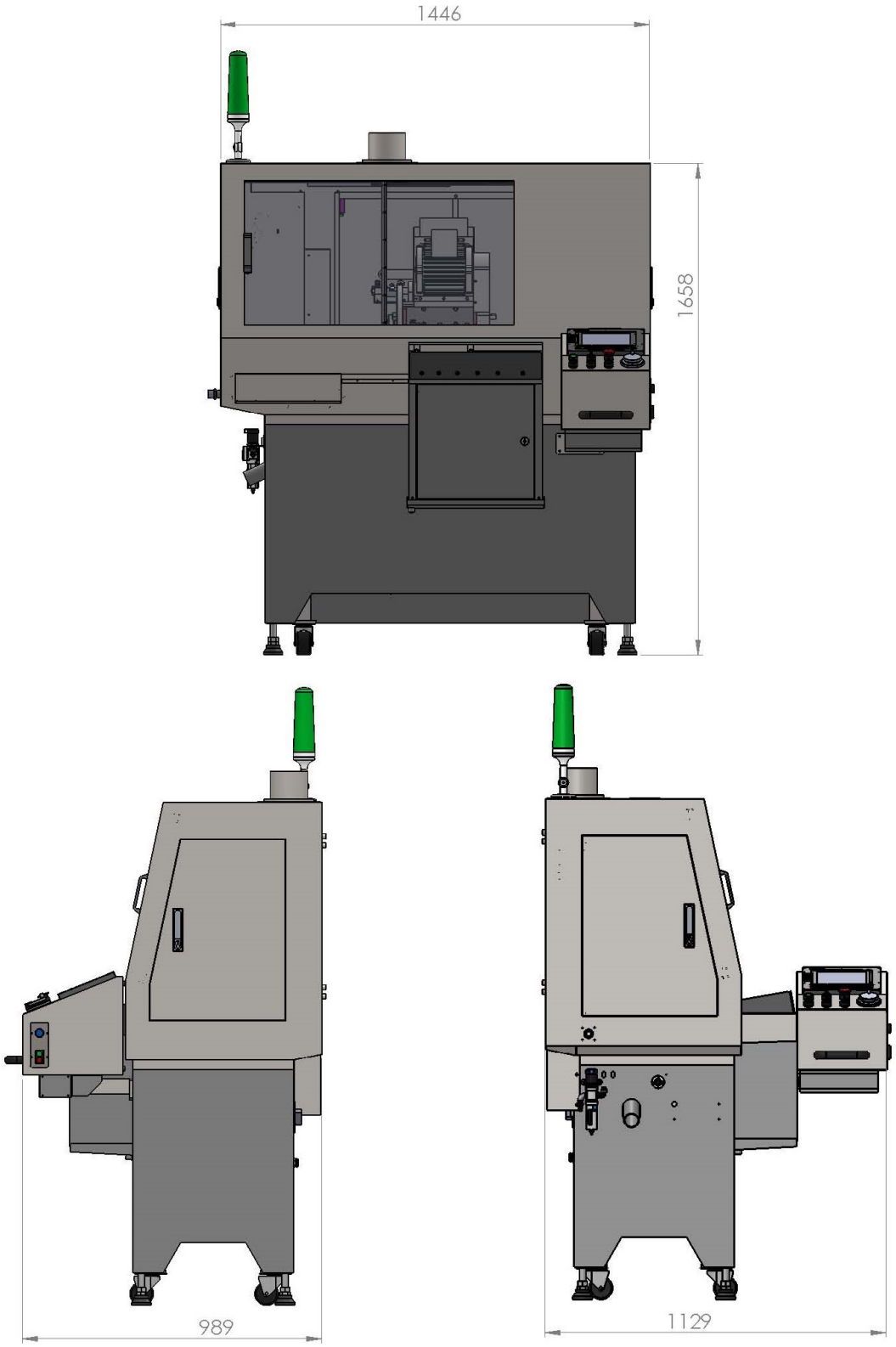

1.2 Axis Definition

X axis: Feeding

Y axis: Cutting Wheel

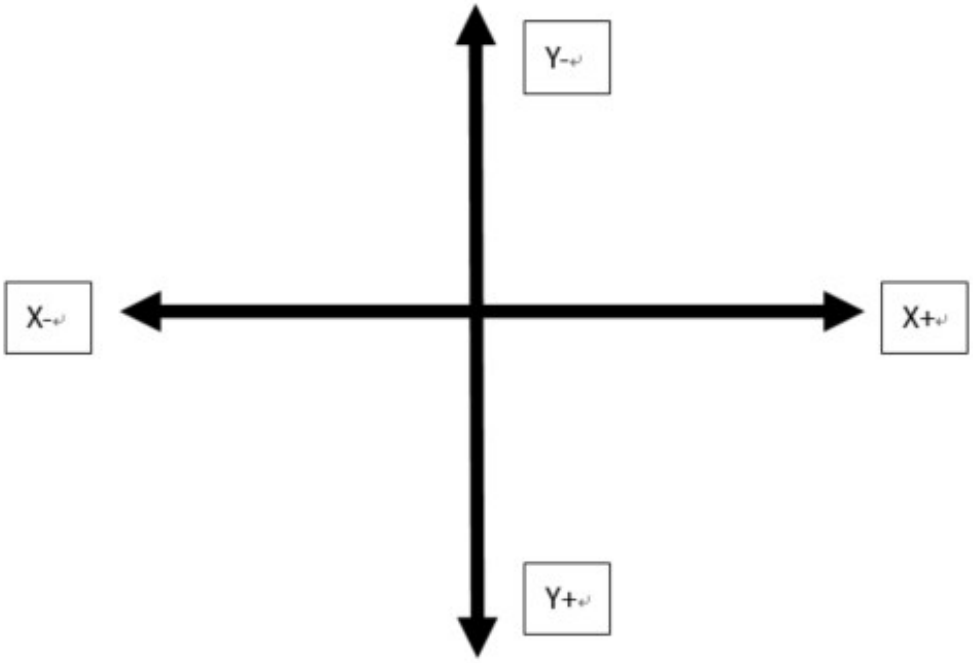

1.3 Base

CH-CM0207 must be stable installed on flat ground and fixed.

1.4 Environmental

Table 1.1 Environmental Situations

Highest humidity	70%
Room Temperature	18~22°C
Dust	Environment must be kept with cleanness equivalent to a clean room
Vibration	Shocks from strong vibrations may impact machine function and life
Electromagnetic field	Strong electromagnetic field (EMF) may interfere with machine operation

1.5 Specification

Table 1.2 Specification

Area	Europe	China	Taiwan
Input voltage	3Ø 415V AC	3Ø 380V AC	3Ø 220V AC
Frequency	50 Hz	50 Hz	60 Hz
Power consumption	8KW	8KW	8KW
Current	Under 20A	Under 20A	Under 20A
Breaker capacity	20A	20A	20A
Wire size	12mm²	12mm²	12mm²
Pneumatic requirement			
Rated pressure	6.0 bar		
Humidity	Compressed air must be dried		
Compressed air cleanness	Compressed air must be filtered		
Compressed air consumption	50 L/min		
Other information			
Machine Dimensions	(L)2,052mm* (W)1,550mm* (H)1,927mm		
Machine weight	1,020 Kg		

1.6 Movement / Storage

* Machine always up when delivery.

*When moving machine be cautious of tipping or shaking the machine and be aware of the center of gravity position.

*Use a crane or forklift to move the machine.

*The minimum load for lift is 2000kg, extension length is 2.5 meter.

*Observe the space while moving the machine.

*Center of the machine is on the center of left side.

1.7 Unboxing

1. Remove the protective film from the machine.
2. Only use lift (crane or forklift) to move the machine to proper position

2. Safety

2.1 Dangerous Area

CH-CM0206 provides safety devices to protect the operator.

Error and misuse while operating the machine may cause below risk:

The operator could be affected with loss of life and injury.

Damage to the machine or other property.

Affect machine efficiency.

****The operator or machine maintainer must have:

Qualification

Study operation manual instruction

2.2 Operating Safety

An Unauthorized Modification is Forbidden. It could affect machine efficiency and human safety. Each operation、 service and maintenance are mentioned in this manual and must be strictly observed.

2.3 Safety Equipment

Safety device operation on CH-CM0206 can't be affected by extra installation.

The emergency button must be easily accessible.

2.4 Noise

The noise of CH-CM0206 on operating is under 70dB(A) (Excluded option exhaust equipment.)

Noise value is based on ISO 7960

Table 2.1

	Idling	Operating
Declared A-weighted Sound Power Level, Lward, in dB re 1 pW		
Declared A-Weighted Emission Sound Pressure Level, lpAd, in dB re 20 μPa, at the operator's position.		

Value determination is according to ISO 3746 inspected regulations.

This reference graph is emission grade, which is not the requirement of safety working grade. When specifying the grade and exposed grade and have the relationship, do not use this table to judge it, it should be in addition another safety measure.

The real effective exposure level factor includes continue noise period. (The quantity of machines in the work area.)

The exposure grade is according to each country's rule; this information would make it safer for the operator.

2.5 Caution

- Cutting wheel spindle RPM with inverter is 1,500~3,500 RPM.
- It would be shooting out the broken parts or particle to harm un-protected eyes.
- Please do stop the machine before doing the maintenance or cleaning.

2.6 Working Area

Working area is in front of machine and able to see HMI interface

When machine is running, do not stand or lean against the machine or electric box.

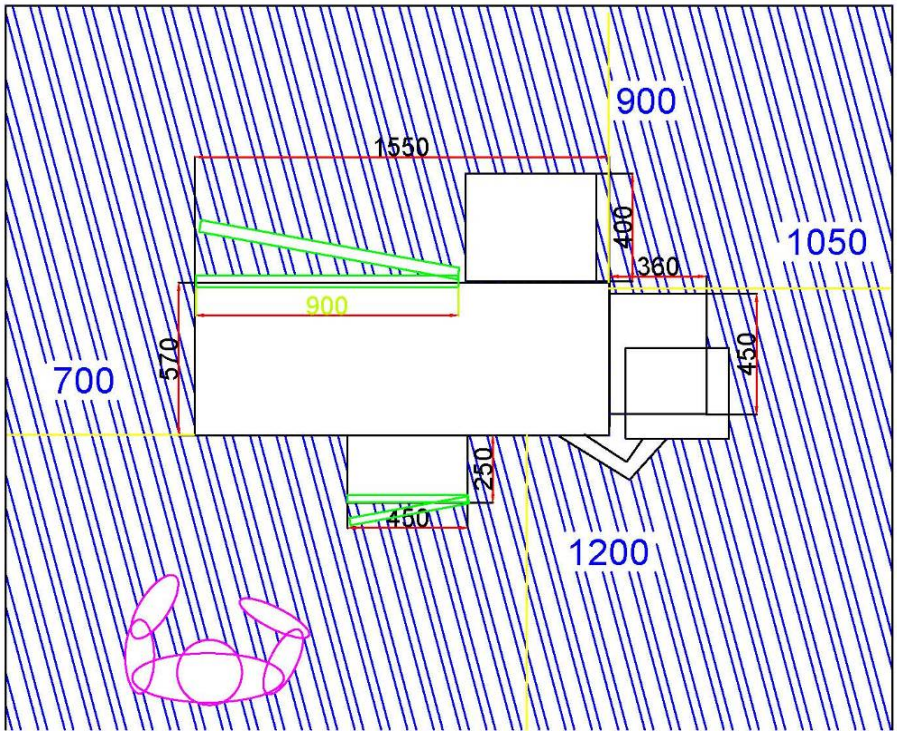

Working Area

2.7 Qualified Operator

Only qualified operators can operate the CH-CM0207.

*The operated responsibility must be specified and restricted clearly. It would cause risk if it's not clearly understood the operation to CH-CM0207.

*User responsibility:

Assigned a person in charge of CH-CM0207.

Make sure the operator who is in charge reads the operation manual carefully and understands how to use CH-CM0207.

2.8 Personal Protected Equipment

When machine is running or open the safety door, please do wear safety goggles to prevent from practical or small parts shooting out and harm the eyes.

2.9 Safety Device

CH-CM0206 stop operated by below switches.

- Emergency Stop
- Main Power
- Safety Lock
- Restart to turn on the machine. (Interrupt the operation)

After maintaining or repairing

2.10 Safety Mark

*All the safety warning signs indicate correct and safety operation.
*All the safety sign on the machine is to indicate that it might have high risk operation or position.
*Do not remove the safety sign from the machine.
*All the safety warning signs are properly placed on the machine.
*Make sure all signs are clearly visible, if any are lost or broken, it must be replaced immediately

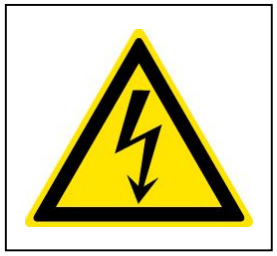

Electric Shock



Rolling Keep Hands away



KCS Certification

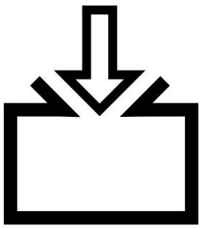

Oil Tank

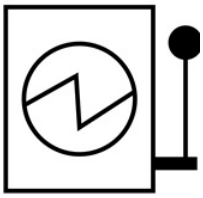

Main Power Switch



Rotary Direction



Press
Keep Hands Away

2.11 Name Plate



Name Plate

2.12 Emergency

Emergency Switch: Press “Emergency Stop” when any emergency condition happening.

All the functions and operations will be stopped immediately when pressing the emergency switch or safety function actuated.



Emergency Stop

2.13 Safety Door



Safety Door Disable Mode：

When safety door inserts the temporary key, the protected function of safety door on HMI is disable, which is means the program can be activate on door opened condition without alarm indicate.

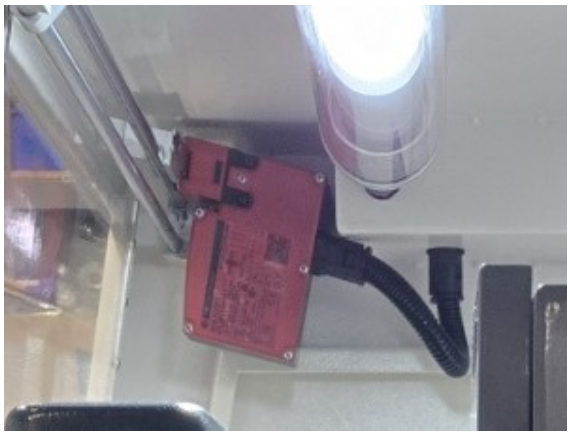

Safety Door Enable Mode：

By using attached key on safety door, operator must be closed the door to run the program, otherwise, the safety function on HMI will indicated warning message.

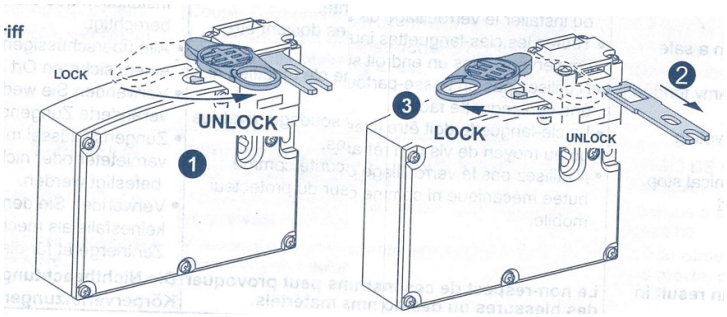

Reset the safety door function：

Turn on the safety mode on HMI, and switch to unlock

3. Main Components

The operator must read and understand operation instructions.
Do not operate the machine before reading this operation manual.
The main components of CH-CM0207 must be familiar with function and definition.

3.1 Mechanism

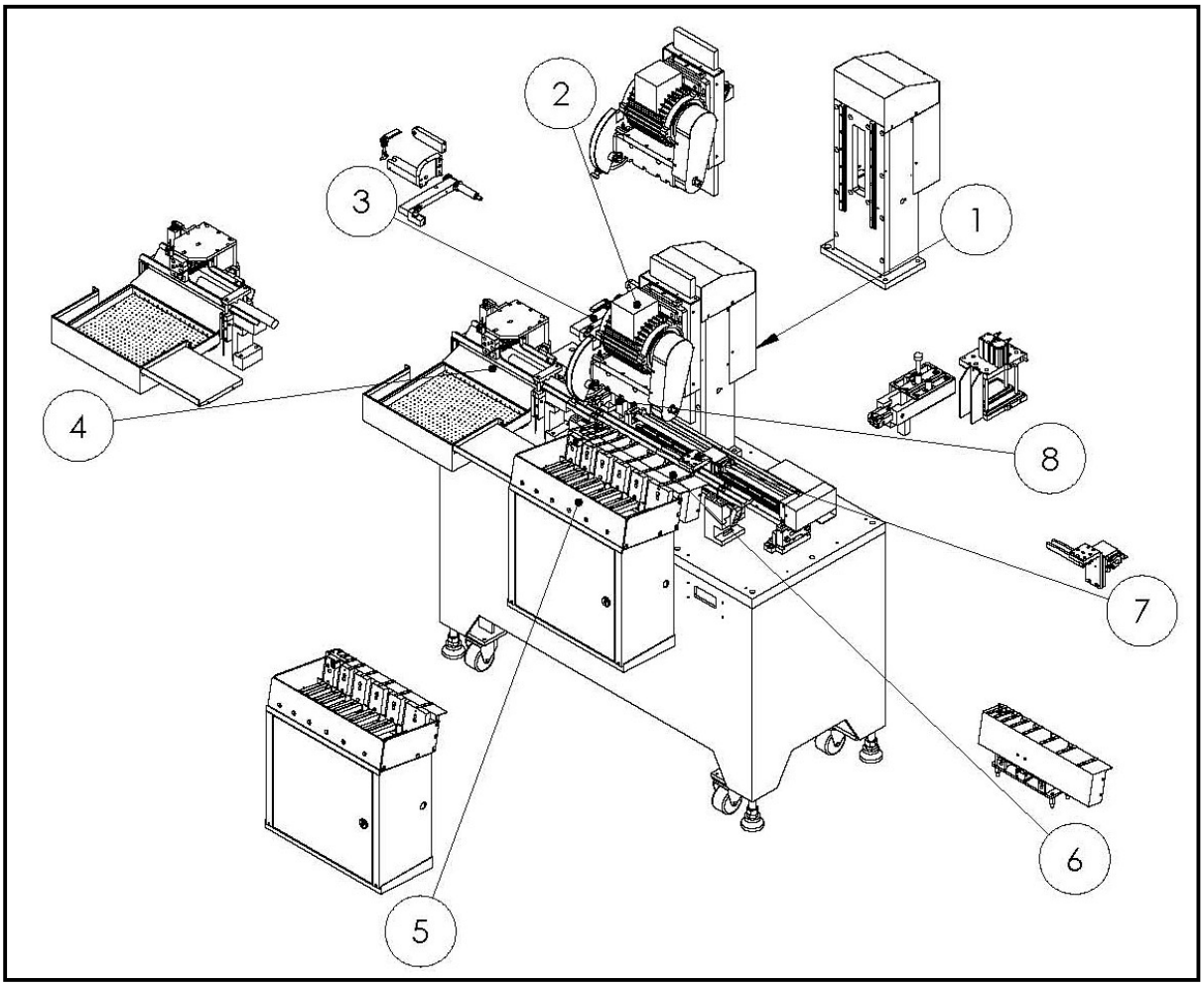

3-1

1. Support base of wheel Motor (Straight up, straight down.)
2. Wheel with spindle mechanism.
3. Probe mechamism.
4. Unloading mechanism.
5. Loading mechanism.
6. Stopper mechanism.
7. Pusher mechanism.
8. Right / Left holder mechanism.

3.2 Electric Lubricator and Oil Cycle

Electric Lubricator:
The electric lubricator is on when machine is on (power on)
When lubrication oil is lower limited, this equipment will start a warning alarm.

Oil box capacity: 4 L
Oil pressure: MAX 7 bar
Lubricating time: 10 SECs
Break time: Max. 180 min

Rail Oil：R68

Operating Instruction:
Oil pressure: the rotary screw on front side of lubricating device can adjust oil pressure (collocate oil button), oil pressure is working when doing lubricating. The pressure of break time is set 0 to provide the oil, which means when break time button is pressured, then lubricating device will be working.
Set/Start: This is the function of setting lubricating / break time. 1st time pressing this button to change the parameter, 2nd time pressing is to finish the setting and start providing the oil. While setting, the LED value can be adjusted by pressing the adjusting button. (0→ 9 cycle), also, changing value, the LED will be blinked. Lubricating time can be set 0~999 sec. Break time can be set 0~999 min.

Oil cycle tank
Often check the oil on the tank to see if the level of oil is ok.
If the oil level is abnormal, to prevent oil from overflowing and contaminating the ground, recommend observing oil cycle condition to check the lubricating device and pipes are normal.

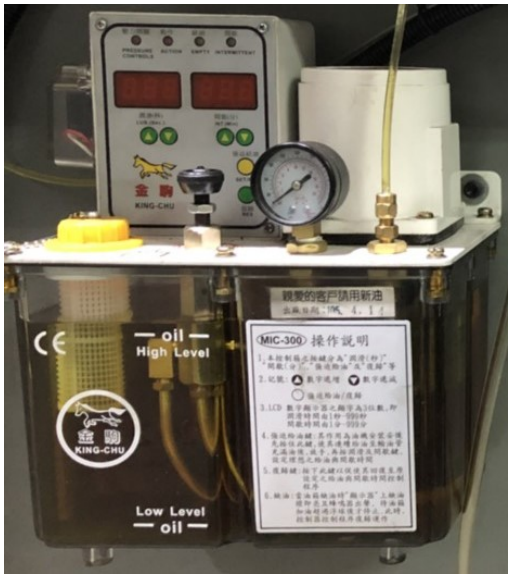

3.3 Air Pressure Unit

The pressure of the outer air supplier needs to be set at 4 bar; air adjusted valve pressure is set 5 bar.

Air pressure sensor is set at 5 bar

1. The main switch of air pressure unit.
2. Air pressure sensor.
3. Filter element (needs to be exhausted of water regularly.)

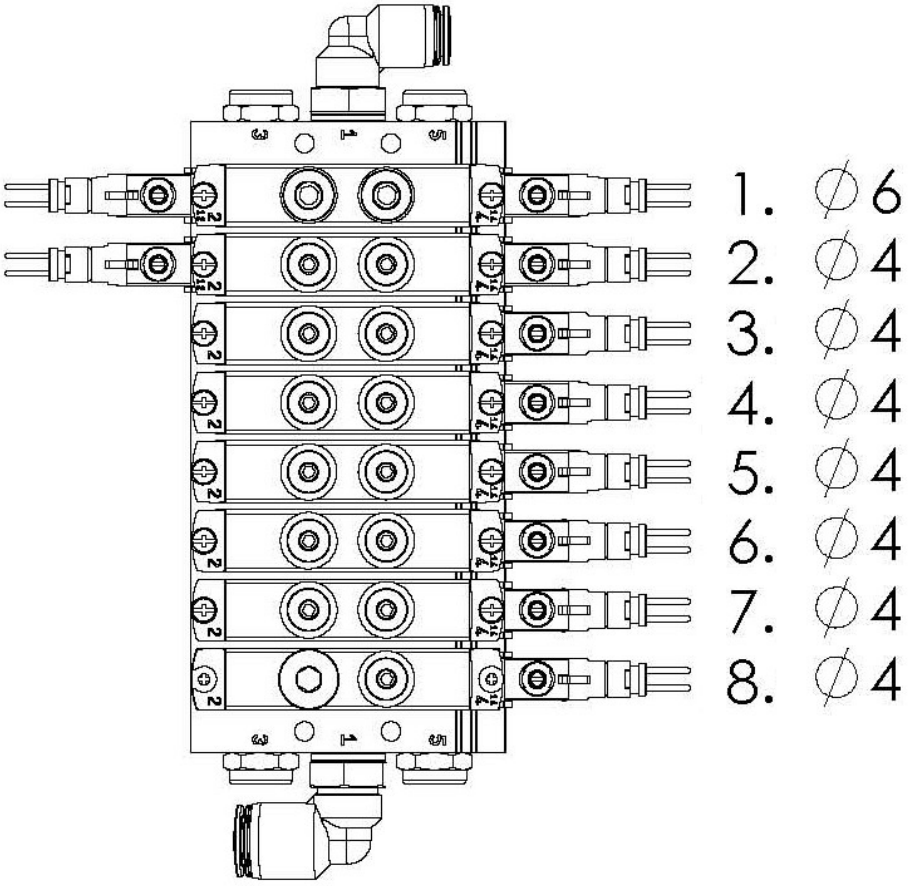

Air pressure solenoid 8 connector & circuit diagram (Festo)

No	Name	Connection	Part No.	Q'ty
1	Loading (Up、Down)	X20 / X19	170867_DFM-40-100-P-A-GF	2
2	Right Holder (Up)	X21	8092095_ADN-S-25-40-A-P-A	1
3	Left Holder (Up)	X22	8092095_ADN-S-25-40-A-P-A	1
4	Stopper (Up)	X23	170915_DFM-20-20-P-A-KF	1
5	Loading Plate (Backward)	X24	MCFB-11-20-25M	1
6	Unloading Pressed (Up)	X25	8091675_ADN-S-16-25-A-P-A	1
7	Unloading Clamper (Clamped)	X26	8112220_DHPL-20-40-P-A	1
8	Probe Air		PRC-620-SENSOR	1

3.4 HMI Control Panel and Button

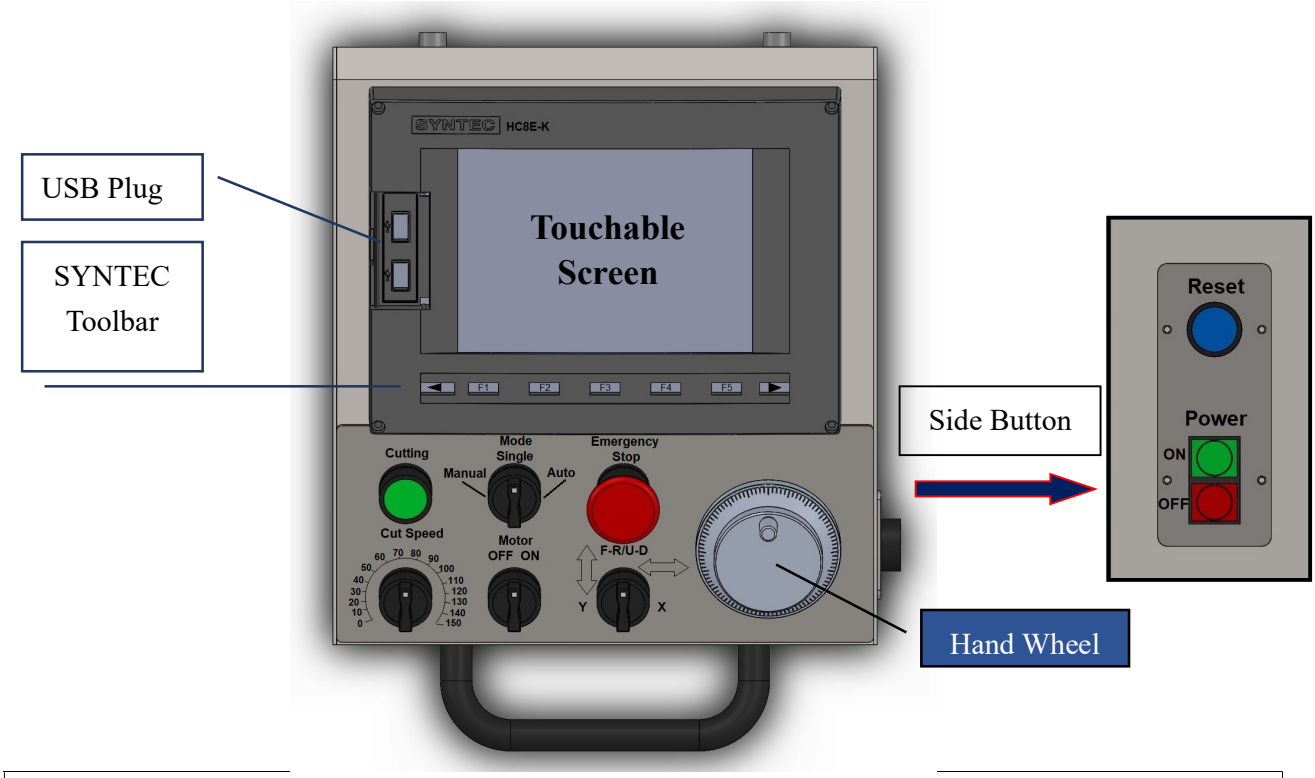

Functions of Control Panel			
1.	Reset (Side Button)	Power：ON/OFF (Side Button)	
2.	Cutting	On Auto mode, press it to start processing with auto loading. ※EM button released, press it to let X & Y go back to home position.	
3.	Mode Select	Manual：	Processing feeding simulation. (Manual Loading)
		Single：	Processing single cutting cycle. (Manual Loading)
		Auto：	Processing automatically cutting. (Auto Loading)
4.	Emergency Stop	Press it to stop the program immediately.	
5.	Cut Speed	Processing speed rate knob.	
6.	F-R / U-D	F-R：Control X direction by using hand wheel to move x asis forward or backward. U-D：Control Y direction by using hand wheel to move wheel up and down.	
6.	Hand Wheel	Move X axis or Y axis.	
*Manual mode simulation.		Cutting Motor OFF：Simulate the feeding section without processing. Cutting Motor ON：To process single section cutting.	

- **Tri-colored Indicator**

Color	Mean	Description
Red	Alarm	The program is emergency stopped; the red will be flashed by 0.5 sec.
Yellow	Standy by / Program End	When power is on and the mechanism is home or after the program is finished, the operator can edit the program when the yellow light is on.

Green	Program Normal/ Running	When the program is under processing, the green will be lighted on; also, the operator can't edit the program as well.
Flashing G & Y	Finial bar	When processing auto loading, the last bar or 2 bar cutting, after that, machine stops.

4 Basic Operation

4.1 Machine Check and Method

1. Check machine appended
   *If it's normal, start operating.
2. Check the internal mechanism of X and Y axis.
   *If there is no possibility of interference with each other, start operating.
3. Check the cutting wheel appurtenance and rotate the cutting wheel manually, make sure cutting wheel is installed properly and motor rotating direction is correct.

4.2 Machine Start

A. Start operat the machine
   1. Check the power connection.
   2. Turn on the machine.
   3. Press the side button of "Reset" to start setting parameter.

4.4 Home Position

A. After EM button pressed, release the EM button, turn the motor OFF, press" Cutting" to release the alarm→Let X axis & Y axis back to home position.

B. Program stop： (If pressing the side button of" Reset")

(1) On processing, switch to Single or Auto mode with motor ON, switch the motor OFF→all axis will go back to home position.

(2) On auto page to press "X Home" 、" Y Home" to home position.

4.6 Program Updating Steps

Description	Photo
Step 1 a. See the blow “Toolbar” b. Press “Electronic Module”	
Step 2 a. Press “System Admin”	
Step 3 a. Enter Password： 520 b. Press “OK”	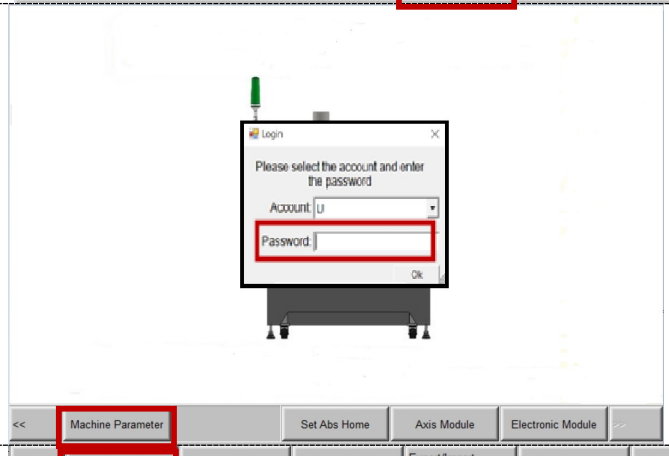
Step 4 a. Select “Instal Software	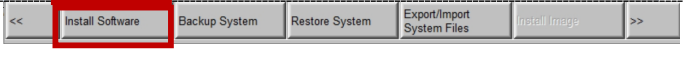

Description	Photo
Step 5 a. The screen showed file selection b. Select “\USBDisk” c. Press “OK” d. After install the software, re-start the machine. e. The software updated is done.	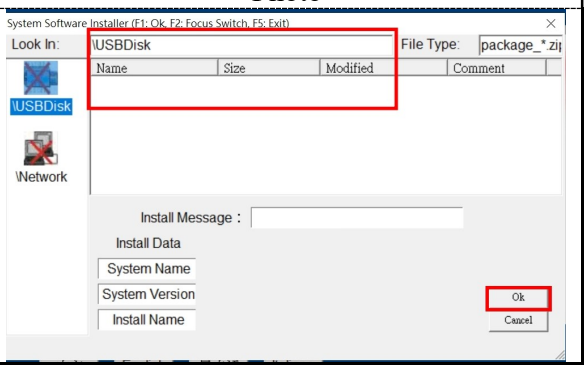

4.6-2 Backup、Restore

<Refer to 1~3 steps> Step 4 b. Select “backup system” or “restore system”.	

*Select file from USB to backup and restore system.

5 Function Introduction

5.1 Main Page <Start Up>

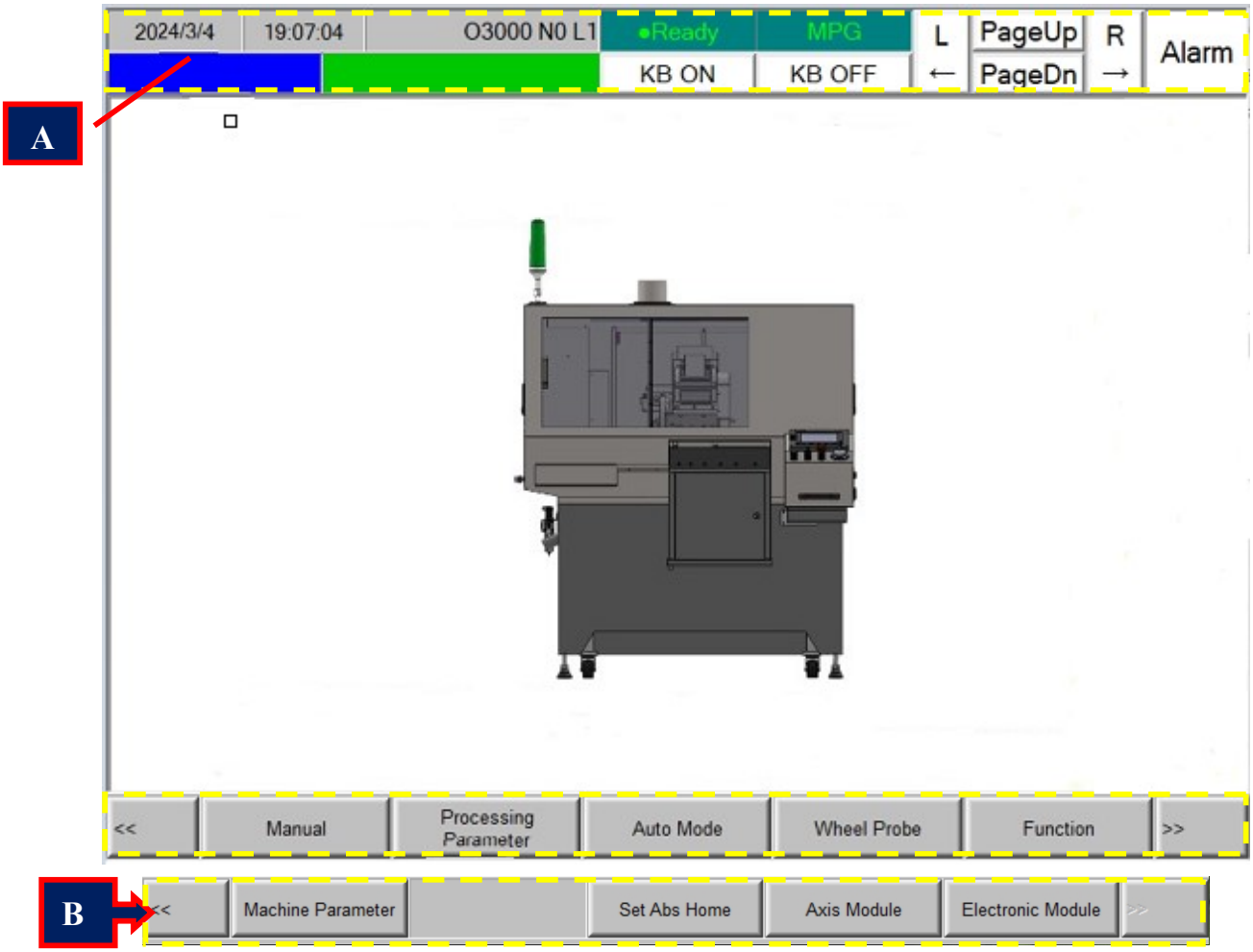

- Power on the machine, screen will be on starting up.
- A-Syntec System Display List：Display the program list, date, time.
- B-Syntec System Toolbar：Apply for OEM setting and software updated.

On main page to go other pages to operate.

- **<<**：Previously page.
- **Manual**：To check all the cylinders, turn the mode to Manual.
- **Processing Parameter**：Set the cutting parameters.

- **Auto Mode**：To show the processing parameters.
- **Wheel Probe**：Wheel setting parameters.
- **Function**：Check the safety parameter and functions.
- **>>**：Next Page
- **Machine Parameter**：Mechanism basic setting.

*Set Abs Home、Axis Module、Electronic Module are Syntec related setting.

5.2 Manual

5.2.1 Manual-1

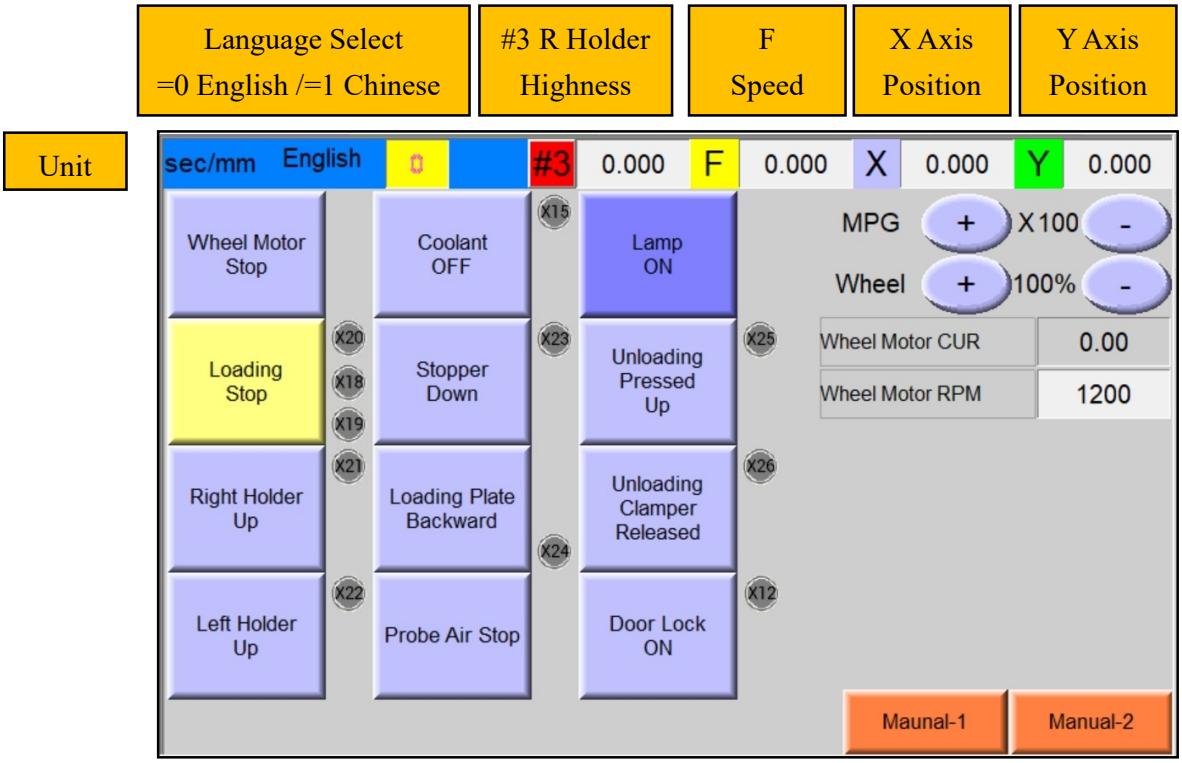

- All function switches. Within this page, all functions can be manually switched on/off and check the status.

5.2.2 Manual-2

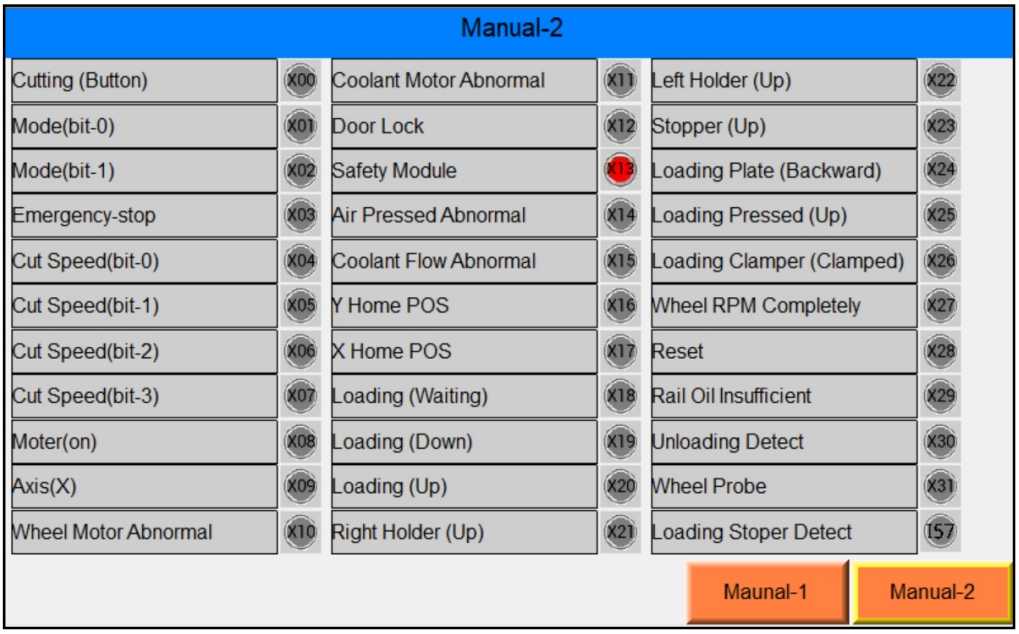

- Input checking.

5.3 Processing Parameter

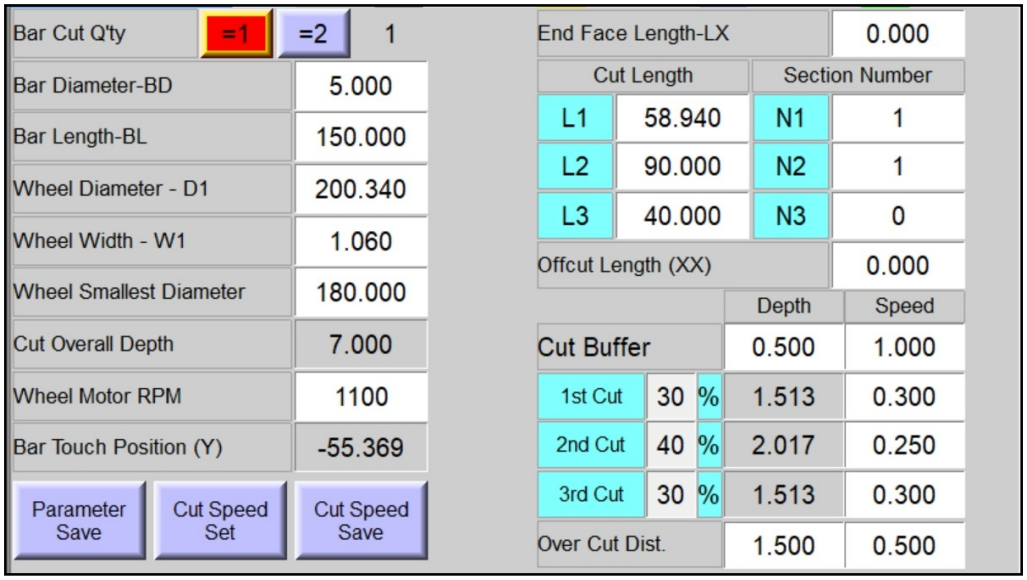

1. Bar Cut Q'ty <=1 / =2>: Select the q'ty of bar in the auto loading mode.

2. Bar Diameter-BD: Set the bar diameter.

3. Bar Length-BL: Set the bar length.

4. Wheel Diameter-D1: Set or after wheel probe, wheel diameter will be shown on this blank.

5. Wheel Width-W1：Set the wheel width. <Offset the cutting length. (Refer to 5.7.1)>

6. Wheel Smallest Diameter：Set the smallest diameter available to do cutting.

7. Cut Overall Depth：Display the cutting overall depth.

8. Wheel Motor RPM：Set the cutting wheel RPM.

9. Bar Touch Position (Y)：Display the touch position of wheel and bar.

10. End Face Length-LX：Set the cutting length of end face.

11. L1~L3：It's able to set 3 different cutting lengths in 1 bar.

12. N1~N3：Set each q'ty of section for each cutting length.

13. Offcut Length-XX：Program calculated the remaining length after cutting is set.

14. Cut Buffer：Set depth / Set speed.

15. 1st Cut~3rd Cut：Set each depth % and cutting speed.

16. Over Cut Dist.：Set distance of over cut and speed.

**Cut Speed Save：Press it to save the current speed into speed list.



5.3.1 Cutting Length Setting Methoid

1. End Face length=0：Bar cuts equally divided in N section

**Only N1 is available to enter, the cut length (L1) will be calculated equally in N section by the program.

**Wheel Width will be counted into the calculation.

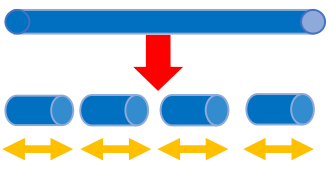

EX：

EndFace Length (LX)：0

N1：4 (Set by Operator)

L1：Inavailable to be changed and calculated by the program. (Divided equally)

2. EndFace length=0：One cut length is available to be set.

**L2 / N2 are available to be set, L1 is cutoff length / N1 will be only available to be set 1.

EX：

EndFace Length (LX)：0

L2 = 90 (Set by Operator)
N2=3 (Set by Operator)

L1：xx (Cutoff)

Inavailable to be changed and calculated by the program

N1：1 (Set by program, Inavailable to be changed.)

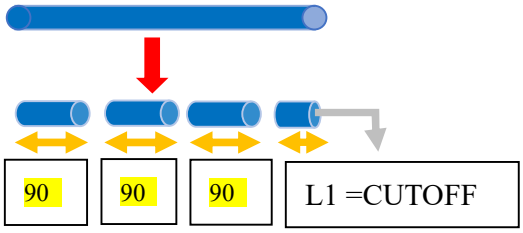

3. EndFace length>2mm：Cut length can be set in 3 different length

**L1/N1、L2/N2、L3/N3 can be set any length.

EX：

EndFace Length (LX) = 2 mm (Set by Operator)
L1= 80 mm / N1= 2 (Set by Operator)
L2=50 mm / N2=2 (Set by Operator)
L3=90 / N3=1 (Set by Operator)
XX=xx mm (Calculated by Program)
(L1/L2/L3 are available to be set by the operator)

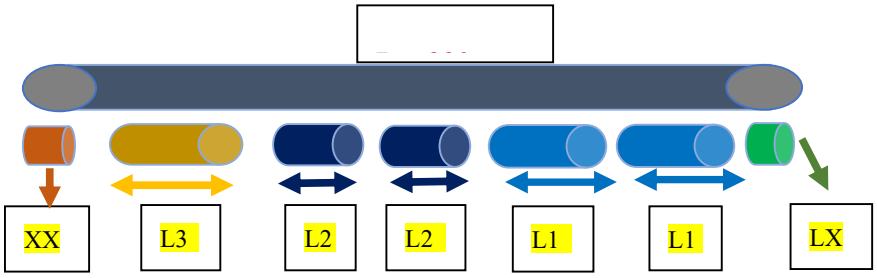

**The length can not be set over the totoal length.
**Wheel Width will be counted into the calculation.

5.3.2 Parameter Save



*It's able to save each cutting parameter to the list.

A: Current cutting parameter setting.

B: 10 sets are available to save.

1. Parameter List / Save:

   Example.:

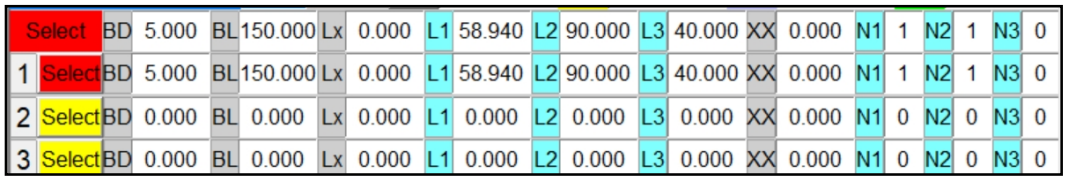

   *To select 1 of 10 to save the current parameter by pressing "Parameter List / Save"

2. Parameter List / Download: To download the parameters which were previously set.

3. Parameter File Save / Download：Download to USB.

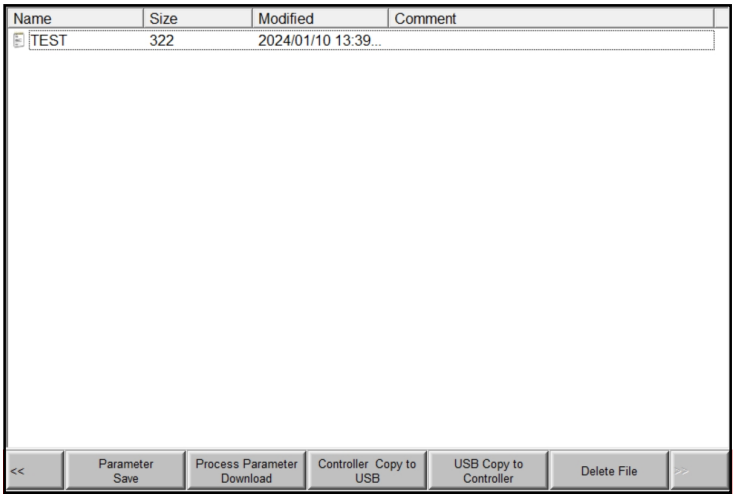

5.3.3 Cut Speed Set

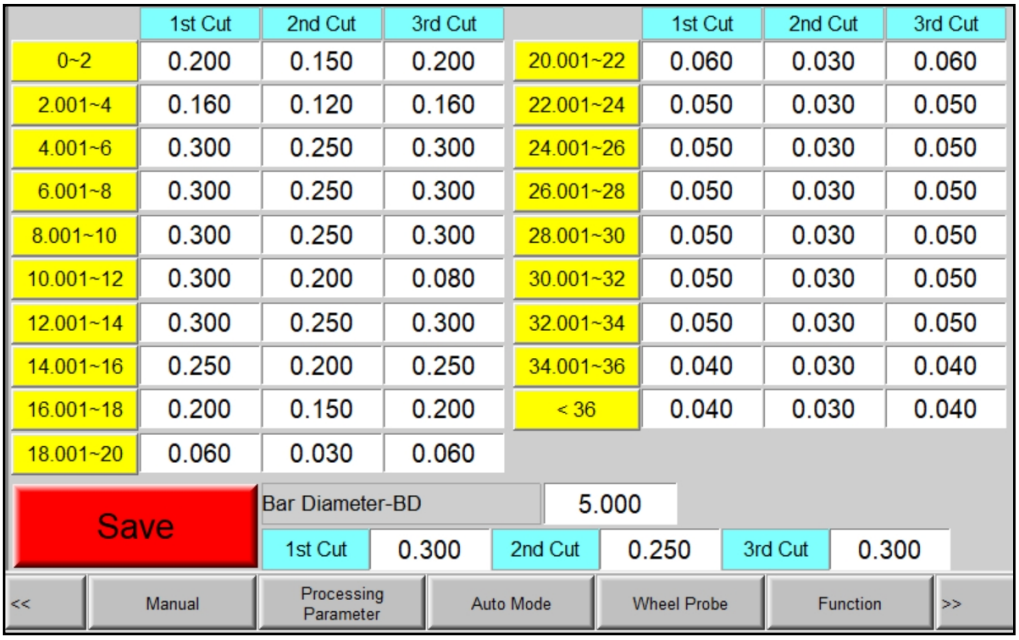

*When bar diameter setting, the cutting speed according to this list will be uploaded to setting page automatically.

*Press “Save” to save the current cutting speed set.

5.4 Auto Mode

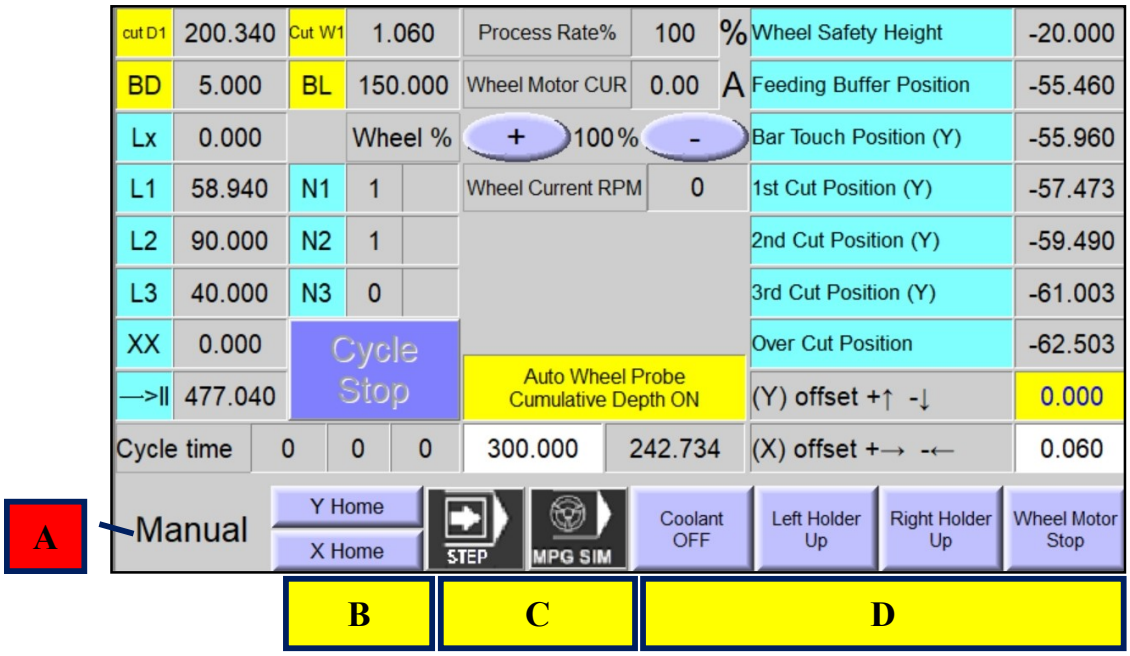

*The parameters set is according to the page of processing parameter.

1. **Wheel Safety Height**：Display the wheel safety height.

2. **Feeding Buffer Position**：Display the wheel cutting buffer distance.

3. **Bar Touch Position (Y)**：Display the wheel and bar touching position.

4. **1st Cut Position** ：Display the 1st cutting position.

5. **2nd Cut Position**：Display the 2nd cutting position.

6. **3rd Cut Position**： Display the 3rd cutting position.

7. **Over Cut Position.**：Display the overcut position.

8. **(Y) Offset**：During the processing, it's able to offset the cutting distance of Y axis.

9. **(X) Offset**：During the processing, it's able to offset the feeding distance of X axis

10. **Auto Wheel Probe Cumulative Depth <ON><OFF> (mm)**：

    Set the cumulative depth / Currently cumulative depth.

    ***When this function is ON, after cumulative depth is complete, the wheel will be probed automatically.**

***When this function is OFF, the wheel will be offset automatically according to the setting on" Function" page. (No do the wheel probe processing automatically.)**

A. Manual / Single / Auto：Display current processing mode.

B. X Home / Y Home：Back to home position.

C. STEP / MPG SIM：Select Step, MPG SIM on auto mode processing.

D. When program stops, it's able to switch the function.

5.5 Wheel Probe

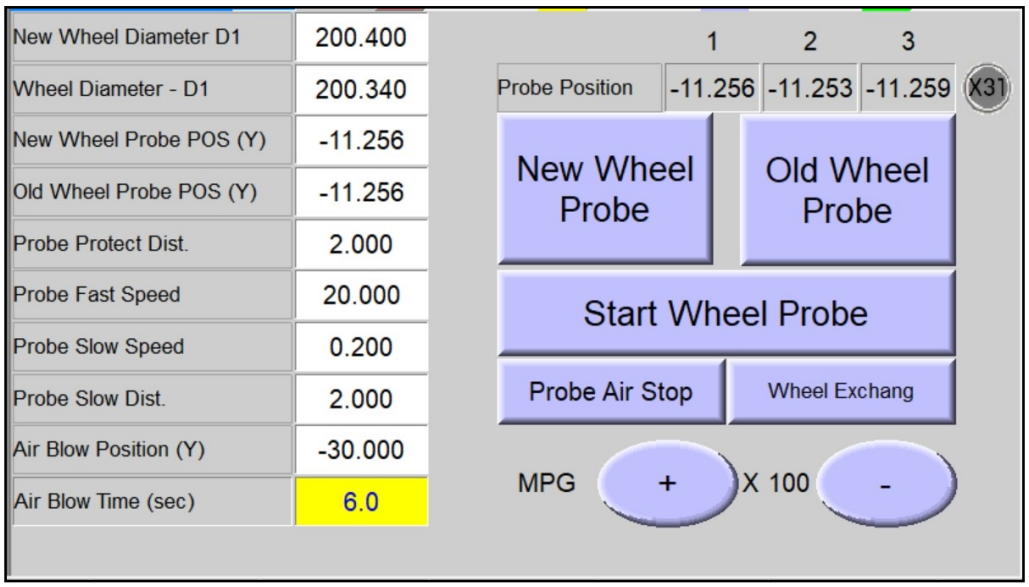

1. New Wheel Diameter-D1：Set the new wheel's diameter to do New Wheel Probe process.
2. Wheel Diameter-D1：After probe processing, the wheel diameter will be entered automatically.
3. New Wheel Probe POS (Y)：After new wheel is probed, the probe position will be entered automatically.
4. Old Wheel Probe POS (Y)：After the old wheel is probed, the probe position will be entered automatically.
5. Probe Protect dist.：when blowing air, the wheel will be back to protect distance.
6. Probe Fast Speed：When doing probe, fast moving speed.
7. Probe Slow Speed：When doing probe, slow moving speed.

8. Probe Slow Dist.：When doing probe, slow speed distance.

9. Air Blow Position (Y)：When doing air blowing, Wheel (Y) position.

10. Air Blow Time (sec)：The time of air blowing.

11. Probe Position：Probe doing 3 times and record each probe position.

12. New Wheel Probe：Use new wheel to do basic probe position.

13. Old Wheel Probe：Use old wheel to do wheel probe.

14. Probe Air Probe <ON><OFF>：Manual ON and OFF.

15. Wheel Exchange：Press this button to let Y axis back to safety position, Right and Left holders are going down to do exchanging.

    (Note：Refer to 5.5.1 to see wheel exchange procedure.)

5.5.1 Wheel Exchange Steps：

1. On wheel probe page, press wheel exchange.

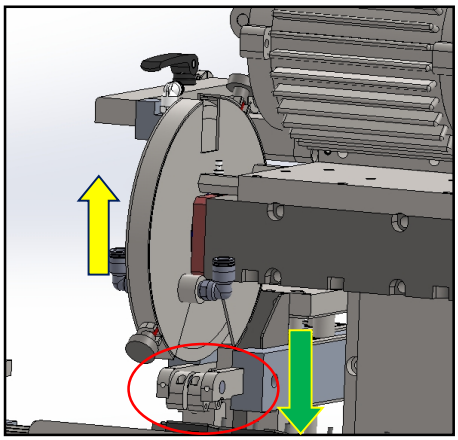

(Y Axis goes up； Holders go down.)

2. Turn up the probe mechanism.

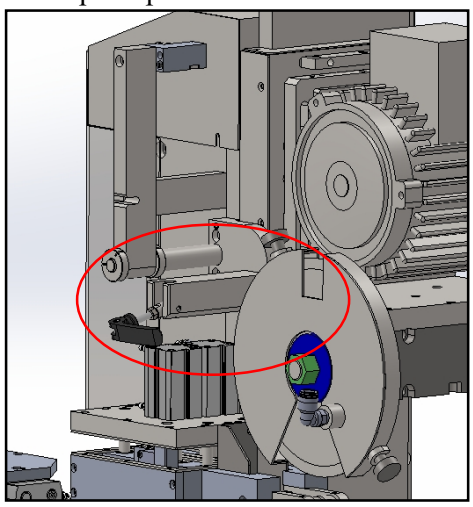

3. Take out the wheel cover.

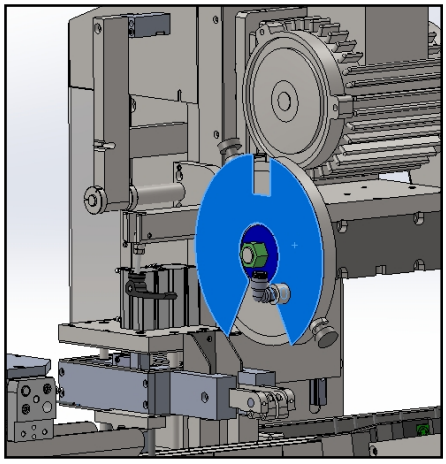

4. Release the screws and and take out flange.

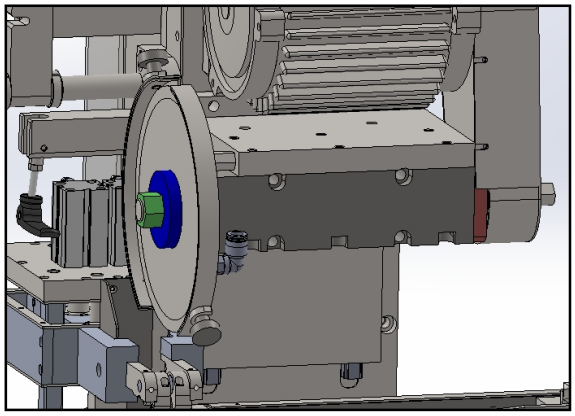

5. In reverse order to assemble back the wheel.

5.6 Function

Feed(X)-Unloading Dist.	200.000	0.000	Bar Cut Q'ty Set	0	0
Feed(X)-Push Remaining Mater D	5.000		Section Cut Q'ty Set	0	0
Feed(X)-Fast Moving Speed	500.000		N Section Released by R Holder OFF	1	
Feed(X)-1st Moving Speed	200.000		Bar Diameter-BD	5.000	
Feed(X)-Slow Moving Speed	1.500		Bar Cut Q'ty =1 =2	1 Bar	2 Bars
Feed-Slow Speed Dist.	3.000		Set Height of L Holder	29.084	28.854
Wheel(Y)-Fast Moving Speed	50.000		Left Holder Home POS to V Button Dist.	35.119	34.889
Wheel Safety Height	-20.000		Height Error Limited	0.450	0.450
Single Bar Loading Position	Back		Current Error Amount	0.000	0.000
Offset Comulative Depth	500.000	Left Holder Up	Right Holder Up	Hoder-Heigh Detect ON	Push Offcut	1st Cut Pressed by L Holder ON
Offset Depth (Single Time)	0.010					

*OEM Setting.

1. Feed(X)-Unloading Dist.--<Set distance> / <Accumulated distance>： Set X axis feeding distance, when the distance is completely, unloading mechanism is released the cutting bars.

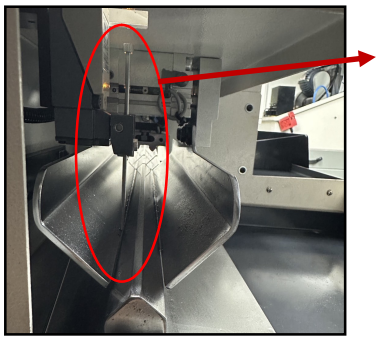

Unloading Sensor Rod：

If “Unloading Dist.” is set zero, when bar is touched the sensor rod during feeding, the unloading clamper will open to let the bars drop.
<Only for “Back V block.>

2. Feed(X)-Push Offcut Dist.： After cutting the last section, X axis will push over the gap of V block according to set distance. (“Push Offcut” function need to ba ON.)

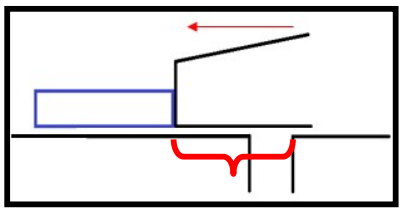

3. Feed(X)-Fast Moving Speed： Set X axis fast moving speed.

4. Feed(X)-1st Moving Speed： Set the first push speed.

5. Feed(X)-Slow Push Speed：Set X axis slow moving speed.

6. Feed(X)-Slow Speed Dist.：Set the distance where bar is push close to cutting wheel with slow speed.

7. Wheel Safety Height：Set the wheel safety height.

8. Single Bar Loading Position<Front><Back>：Set the loading position when loading single bar.

9. Offset Cumulative Depth：when off the probe function, program will calculate the depth and do Y axis depth offset.

10. Offset Depth (Single Time) ：The depth offset for Y axis.

11. Bar Cut Q'ty Set--<Set Bar Q'ty> / <Currently Cumulative Q'ty>：Q'ty completely, program stops.

12. Section Cut Q'ty Set--<Set Section Cut Q'ty> / <Cumulative Q'ty>：Q'ty completely, program stops.

13. N Section Released by Rholder --<ON> <OFF>：Set N Section, right holder goes down with air released to do feeding.
    (Apply for feeding small bar.)

14. Holder-Height Detect <ON> <OFF>：Function is ON, right holder detects the bar diameter when it goes down. (Safety Device.)

15. Push Offcut--<ON> <OFF>：Turn on to push the bar after cutting.

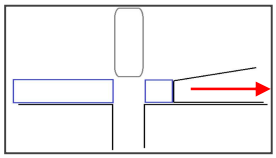

*If function is OFF, after cutting the last part, the feeding will go back to the loading position.

16. 1st Cut Pressed by L Holder <ON> <OFF>：When cutting 1st section, left holder will not press down.→Apply for cutting used bar.

17. Holder-Height Detect --<ON> <OFF>：Function is ON, right holder detect the bar diameter when it goes down. (Safety Device.) (To prevent from loading 2 bars in 1 V block.)
    *When the alarm shows bar diameter error alarm, program will stop immediately.

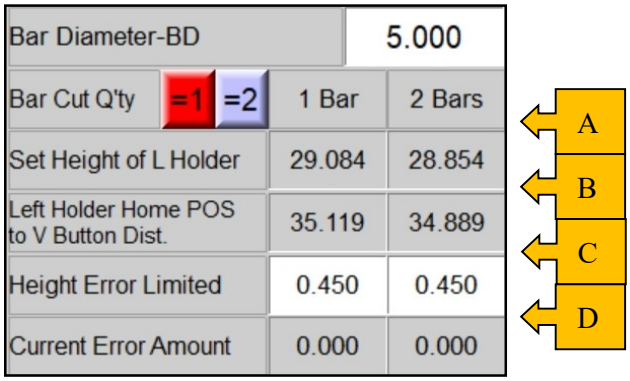

A. Display the height position of left holder pressed down.

B. Display the left holder's distance from home position to V bottom.

C. Set the height error limited. (If it's over error, show alarm and stop the program immediately.)

D. Display the different error amounts when pressed down the left holder every time.

5.7 Machine Parameter

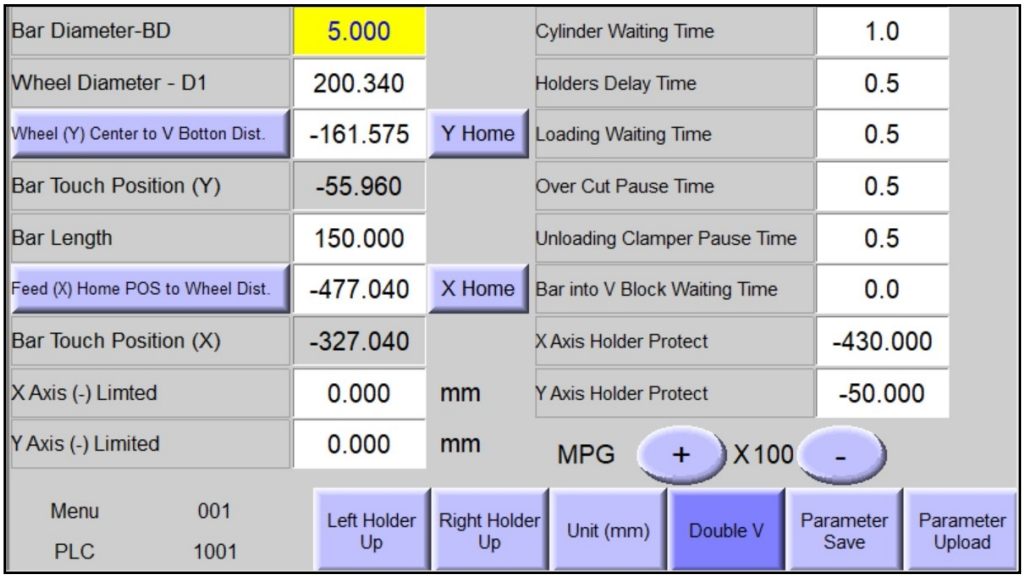

1. Wheel (Y) Center V Bottom Dist.： When closing the wheel and bar, press this button, program will calculate the distance.

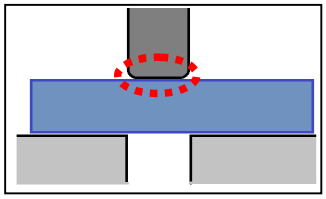

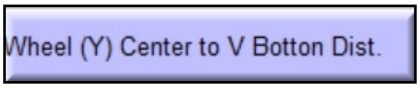

2. Bar Touch Position (Y)： After setting, the program will automatically enter the position.

3. Bar Length：Enter the bar length when adjust the position.

4. Feed (X) to Home POS to Wheel Dist.：When wheel touches the bar, press this button to set the position.

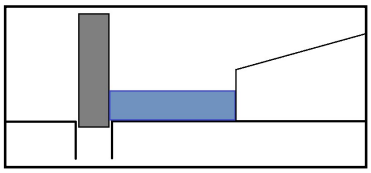

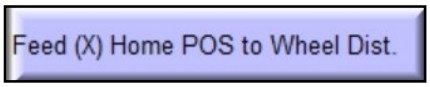

**5.7.1 Note：Cutting Length Offset：

a. Last section is length different.

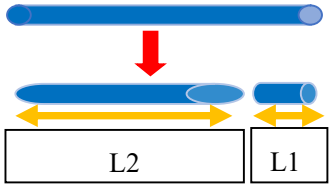

Cheek L2 length to do length offset.
Offset “Feed(X) Home POS to Wheel Dist.”
Length Longer + **different value**.
Length Shorter - **different value.**

b. Middle sections is length different.

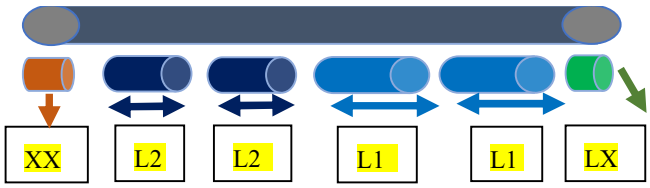

Check L1 and L2 to do length offset.
Offset the “Wheel Width”.
Length Longer - **different value**.
Length Shorter + **different value.**

5. Bar Touch Position (X)：After No.4 is set, the position will be entered automatically.

6. X Axis (-) Lmited：Set the X axis negative position.

7. Y Axis (-) Lmited：Set the Y axis negative position.

8. Cylinder Waiting Time：Set the cylinder reaction time.

9. Holders Delay Time：Set the holders delay time.

10. Loading Waiting Time：Set the loading waiting time.

11. Over Cut Pause Time：Set the over cut pause time.

12. Unloading Clamper Pause Time：Set the unloading clamper pause time.

13. Bar into V block Waiting Time：Set the waiting time after loading to V block.

14. X Axis Holder Protect：Set the X position to let the holders go up.

15. Y Axis Holder Protect： Set the Y position to let the holders go up.

16. Unit： <mm> / <inch>。

17. <Double V> / <Single V>： According to the mechanism to set it.

****When the function switch ON / OFF, the password is <1>.**

1. **Machine Parameter Back Up：** Save all the parameter. (File's name can't be changed.)

   *Save File Route: Next Page/Axis Module/Program/File Manager/O1104.

2. **Machine Parameter Download：** Download all the parameter. (File's name can't be changed.)

   *Save File Route: Next Page/Axis Module/Program/File Manager/O1104.

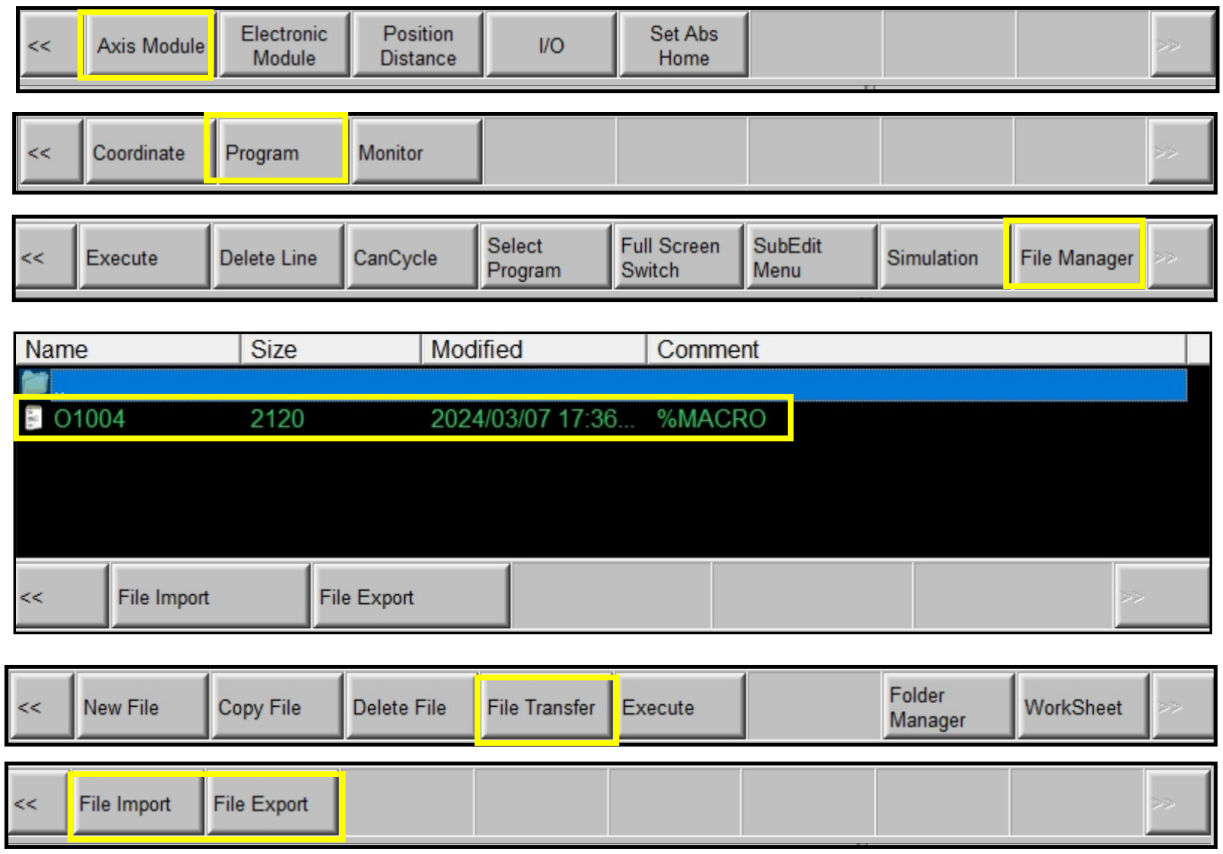

6 Simple Question & Trouble Shooting

1.	Question	Start up the mtor, running sound is abnormal
	Recommend	Take out the cover, and re-start the motor to check the sound of running： a. Check the belt tension. b. Take out the belt and see if the sound comes from the motor. c. Check if the gear has been worn out.
	Comment problem after spindle has been changed： ① Cover installed un-properly. ② The belt is not adjusted properly, or the belt has been worn out. ③ Check if the wheel spindle is installed properly or has been worn out.	
2.	Question	Cutting Sound abnormal
	Recommend	Since the bar contents different ingredients, the speed of OEM setting might not meet accordingly, to have cutting sounds abnormal： a. Cutting speed adjustment b. Check if the wheel is early touched the bar in wrong cutting phase. →Check the wheel diameter / Y cut center to V bottom parameter.
3.	Question	Cut lever abnormal
	Recommend	If the bar is not cut completely： 1.-a Check if the exact wheel diameter is much different from program probed diameter. 1.-b Check if the bars on the holders are being worn out or fallen →If it's worn out, please adjust or change it to new one. (⌀4.2 L： 15mm) 2. Check if the touch position is early than program cutting phase. →Check the wheel diameter / Y cut center to V bottom parameter.
4.	Question	Wheel Probe Abnormal
	Recommend	1. Clear the sensor surface. (If it's necessary, take out the sensor to clear it.) 2. Check that the lights on the amplifier flash at the same time→ adjust the sensor sensitivity; let only light on in green light. Confirm the sensor of "X18" is kept light ON→Adjust the sensitivity until the X18 is light off.

7 Electrical System

7.1 DELTA Inverter Parameter Setting

Parameter	Setting	Function
00-10	0	Control Mode 0： Speed Mode
01-00	100	
01-12	3	
01-13	3	
00-20	2	2：External Anglogy Input (Refer to 30-00)
00-21	1	1：External Terminal Operation
00-30	2	2：External Analogy Input (Refer to 30-00)
03-00	1	1：Rate Order
06-49	1	LxX Reset
03-20	3	3：Input Electric Current (rms)
09-00	2	
09-04	13	
02-17	2	
02-16	2	

7.2 Circuit Diagram

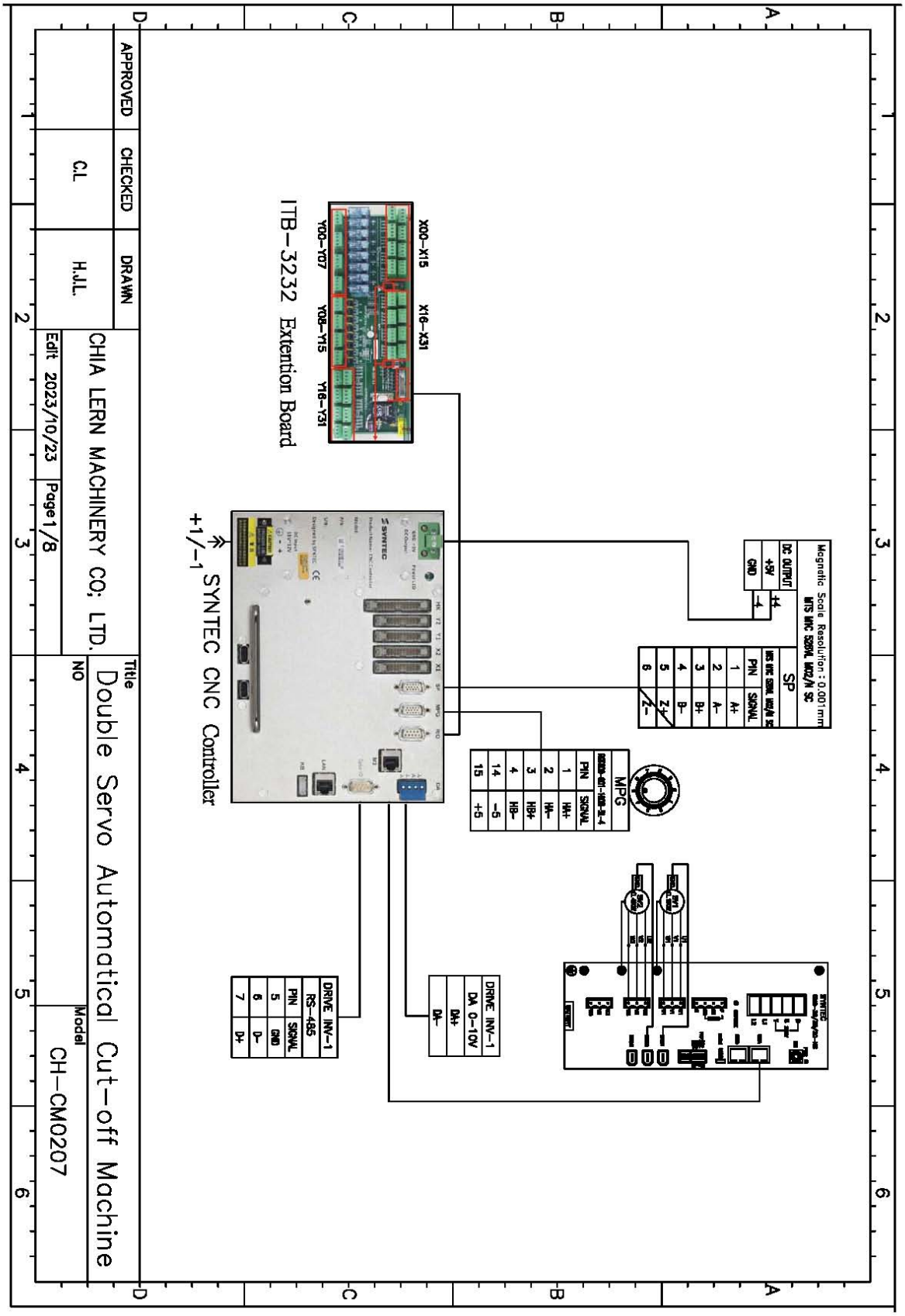

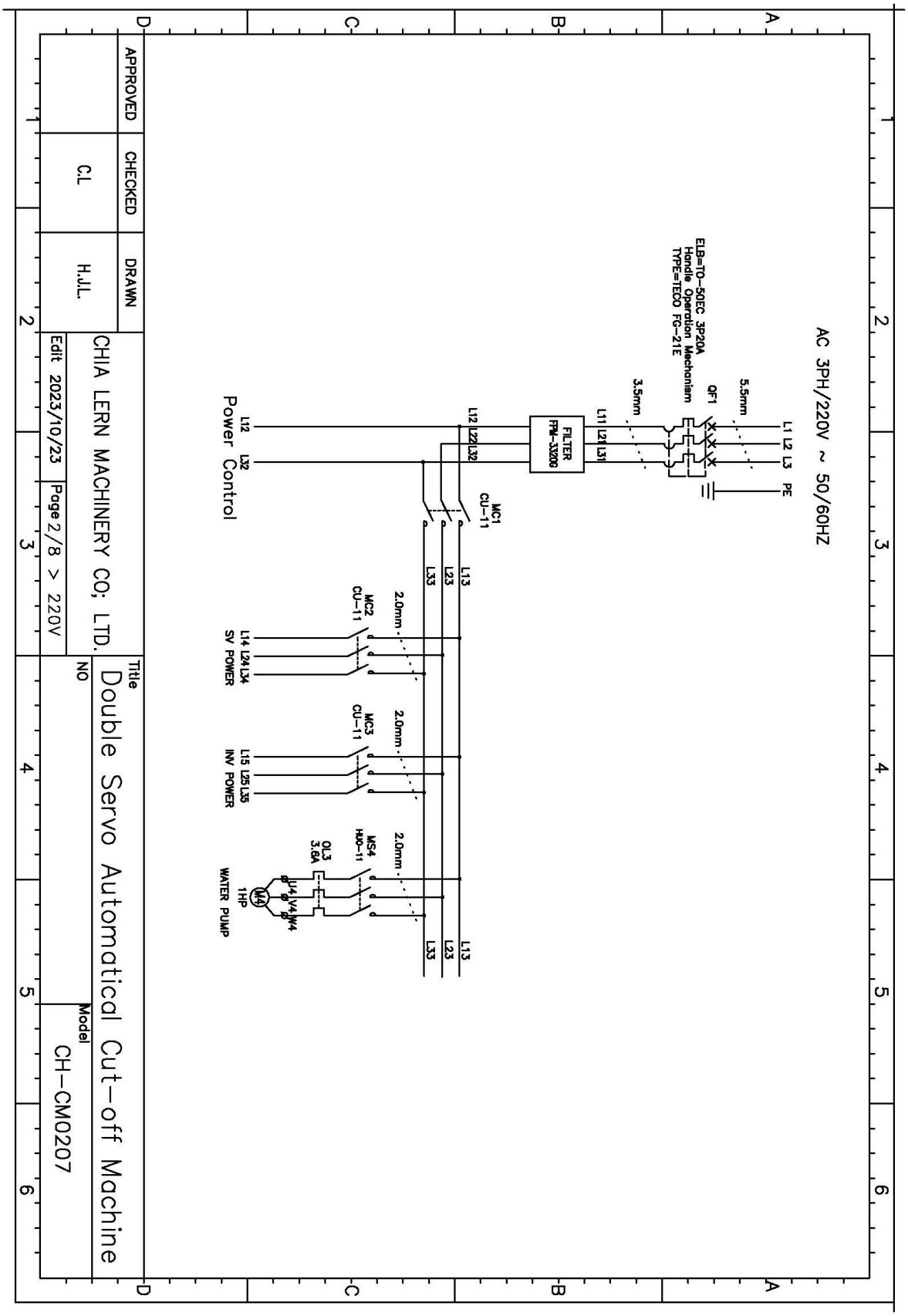
AC 3PH/220V ~ 50/60HZ
ELB=TO-50EC 3P20A
Handle Operation Mechanism
TYPE=TECO FG-21E
QF1
5.5mm
3.5mm
L1 L2 L3 PE
L11 L21 L31
FILTER
FPM-3320G
L12 L22 L32
MC1
CU-11
L13
L23
L33
Power Control
L12
L32
2.0mm
MC2
CU-11
L14 L24 L34
SV POWER
MC3
CU-11
L15 L25 L35
INV POWER
MS4
H40-11
OL3
3.6A
U4 V4 W4
M4
1HP
WATER PUMP
APPROVED
CHECKED
DRAWN
C.L
H.J.L.
CHIA LERN MACHINERY CO; LTD.
Edit 2023/10/23
Page 2/8 > 220V
Title
Double Servo Automatical Cut-off Machine
NO
Model
CH-CM0207

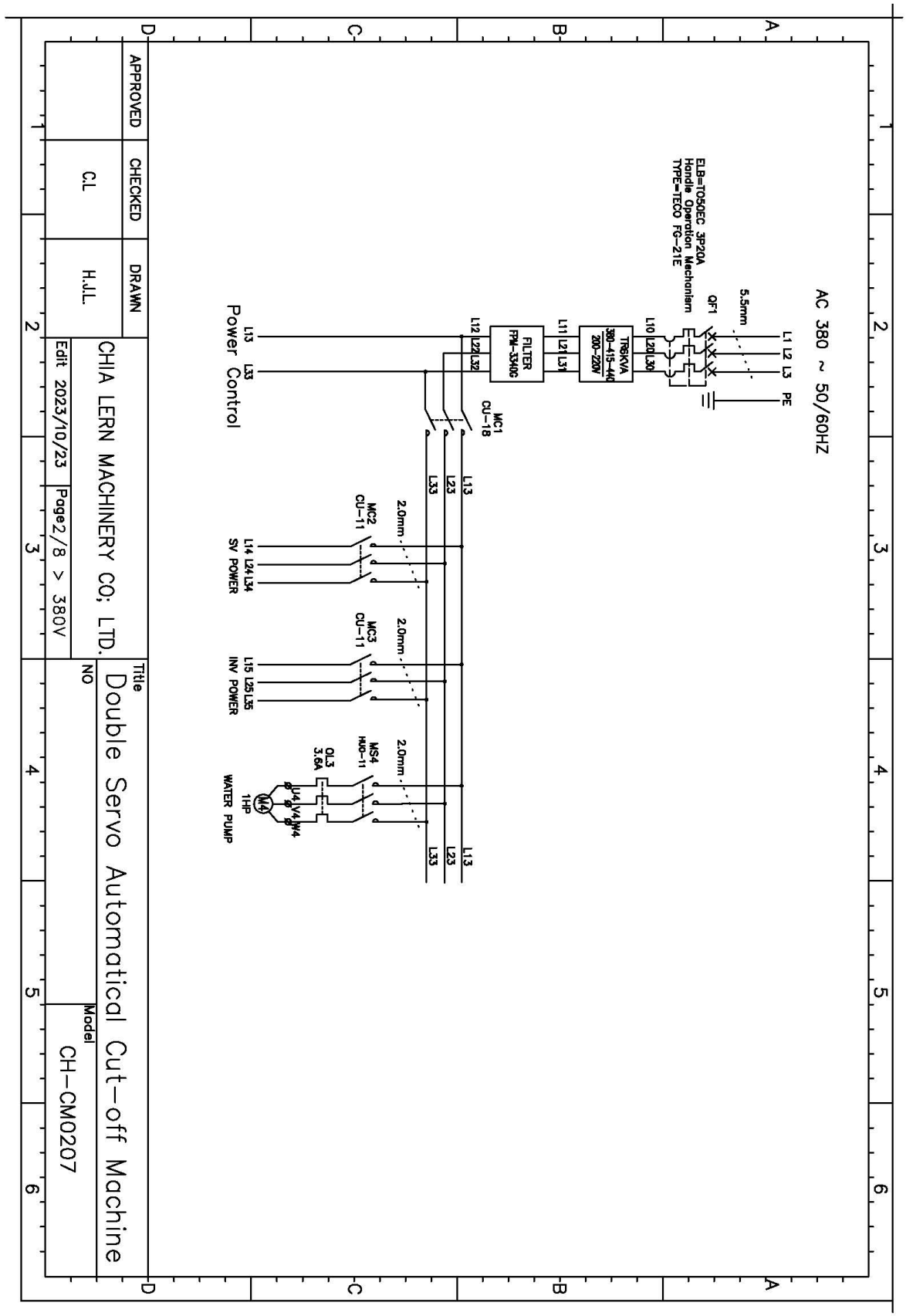
AC 380 ~ 50/60HZ
L1 L2 L3 PE
5.5mm
QF1
ELB=TO50EC 3P20A
Handle Operation Mechanism
TYPE=TECO FG-21E
TR6KVA
380-415-440
200-220V
L10 L20 L30
L11 L21 L31
FILTER
FPM-3340C
L12 L22 L32
L13 L23 L33
Power Control
MC1
CU-18
MC2
CU-11
2.0mm
L14 L24 L34
SV POWER
MC3
CU-11
2.0mm
L15 L25 L35
INV POWER
MS4
HJD-11
2.0mm
OL3
3.6A
U4 V4 W4
M4
1HP
WATER PUMP
APPROVED
CHECKED
C.L
DRAWN
H.J.L.
CHIA LERN MACHINERY CO; LTD.
Edit 2023/10/23
Page2/8 > 380V
Title
Double Servo Automatical Cut-off Machine
NO
Model
CH-CM0207

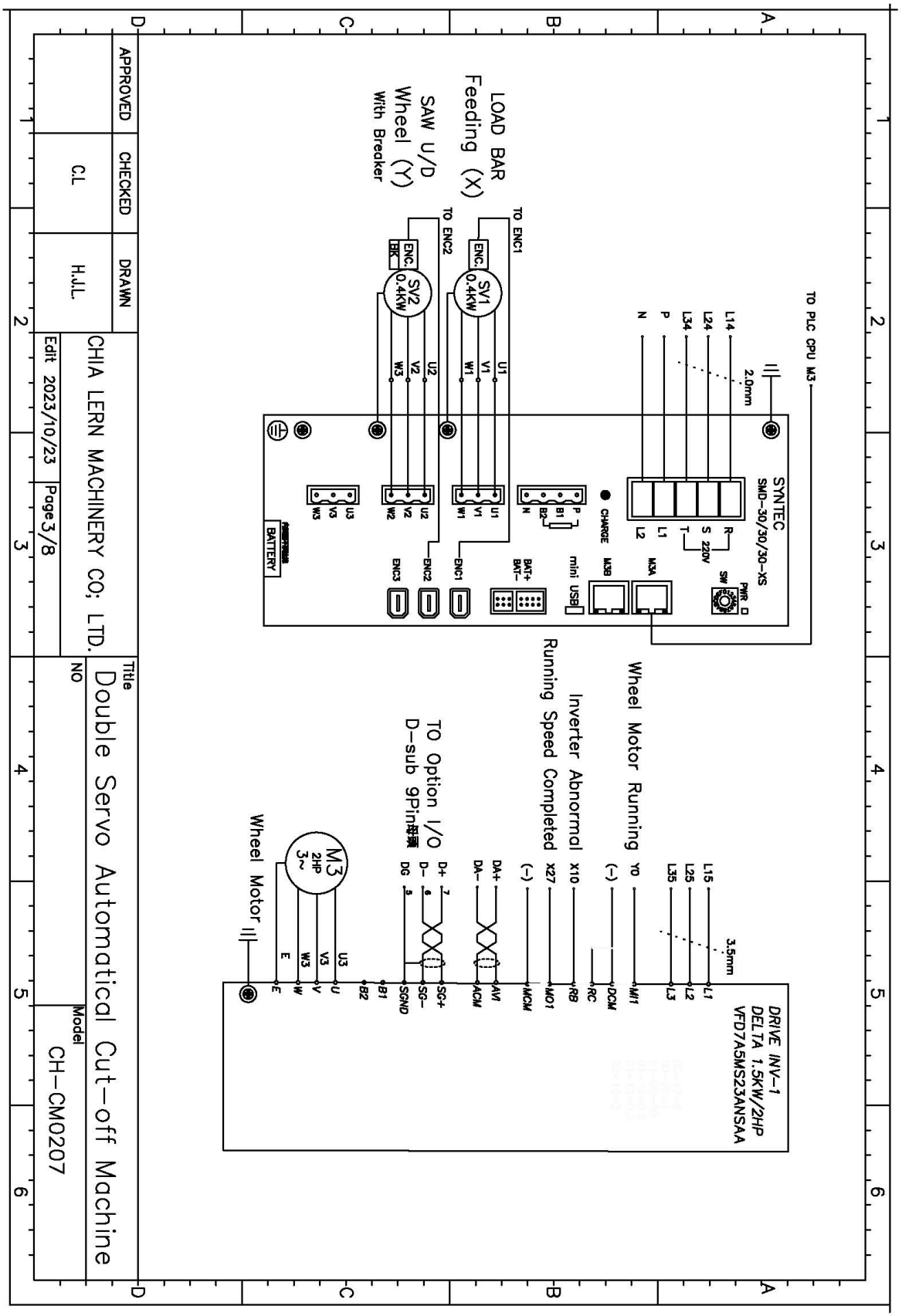
TO PLC CPU M3
2.0mm
SYNTEC
SMD-30/30/30-XS
L14
L24
L34
P
N
R
S 220V
T
L1
L2
SW
PWR
CHARGE
M3B
M3A
mini USB
BAT+
BAT-
P
B1
B2
N
LOAD BAR
Feeding (X)
SAW U/D
Wheel (Y)
With Breaker
TO ENC1
TO ENC2
ENC.
SV1
0.4KW
SV2
0.4KW
BRK
U1
V1
W1
U2
V2
W3
U3
V3
W3
W2
ENC1
ENC2
ENC3
BATTERY
DRIVE INV-1
DELTA 1.5KW/2HP
VFD7A5MS23ANSAA
3.5mm
L15
L25
L35
L1
L2
L3
M1
DCM
RC
RB
MO1
MCM
AM
ACM
SG+
SG-
SGND
B1
B2
U
V
W
E
Wheel Motor Running
Y0
(-)
Inverter Abnormal
X10
Running Speed Completed
X27
(-)
DA+
DA-
TO Option I/O
D-sub 9Pin母頭
D+
D-
DG
M3
2HP
3~
Wheel Motor
APPROVED
CHECKED
DRAWN
C.L
H.J.L.
CHIA LERN MACHINERY CO; LTD.
Edit 2023/10/23
Page3/8
Title
Double Servo Automatical Cut-off Machine
NO
Model
CH-CM0207

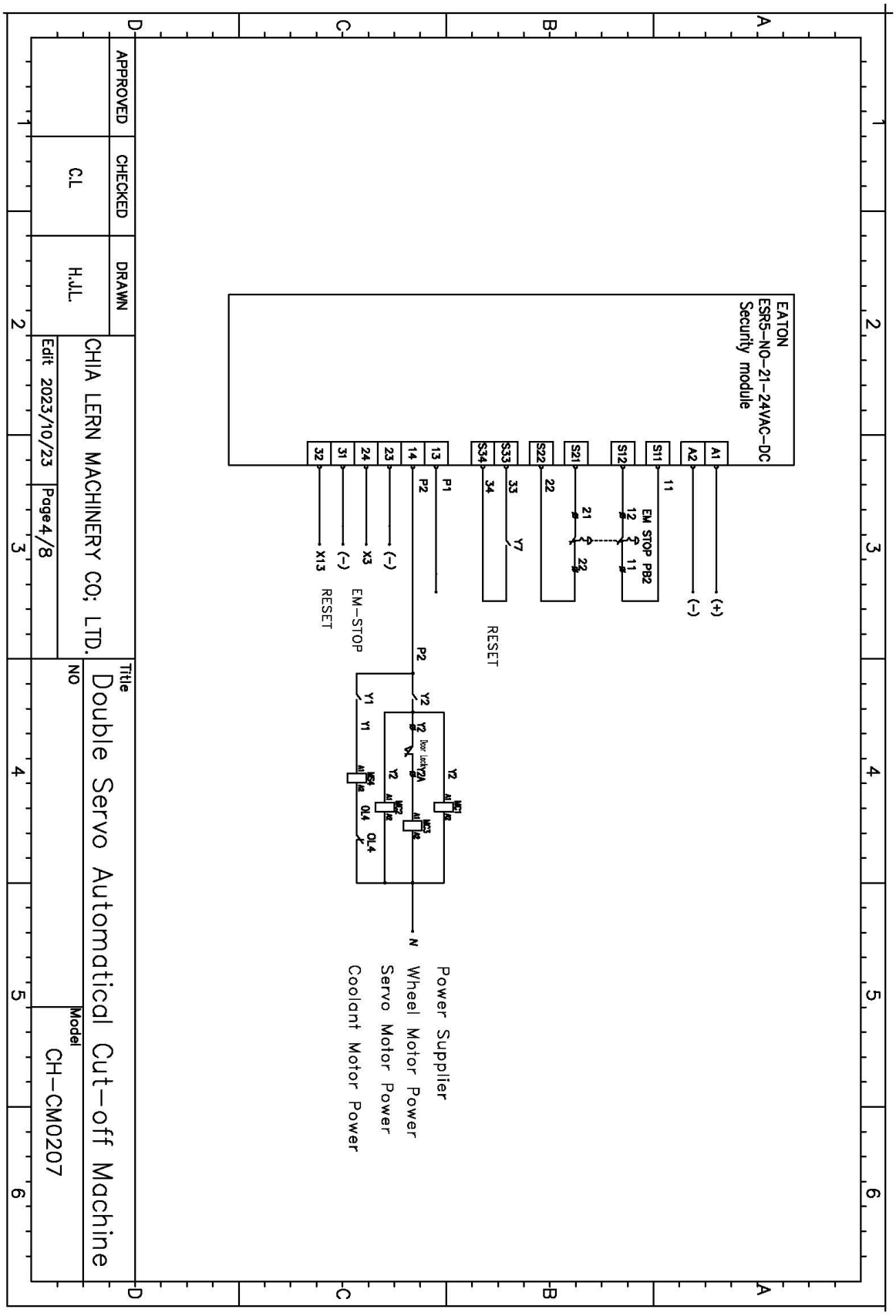
EATON
ESR5-NO-21-24VAC-DC
Security module
A1
A2
S11
S12
S21
S22
S33
S34
13
14
23
24
31
32
11
12
21
22
33
34
EM STOP PB2
(+)
(-)
RESET
Y7
P1
P2
X3
X13
EM-STOP
RESET
Y1
Y2
N
Power Supplier
Wheel Motor Power
Servo Motor Power
Coolant Motor Power
APPROVED
CHECKED
DRAWN
C.L
H.J.L.
CHIA LERN MACHINERY CO; LTD.
Edit 2023/10/23
Page4/8
Title
Double Servo Automatical Cut-off Machine
NO
Model
CH-CM0207

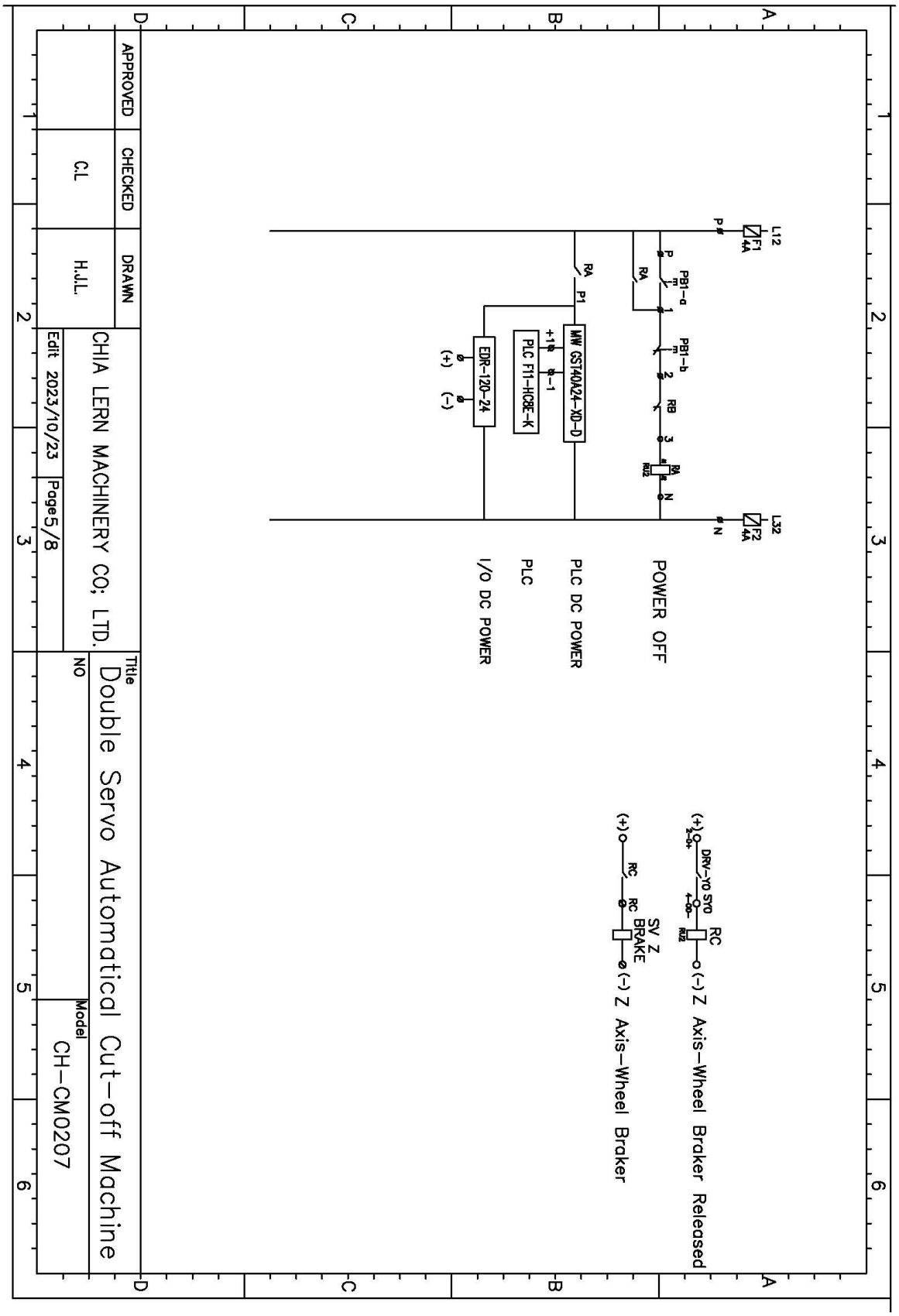
POWER OFF
PLC DC POWER
PLC
I/O DC POWER
MW GST40A24-XD-D
PLC F11-HC8E-K
EDR-120-24
Z Axis-Wheel Braker Released
Z Axis-Wheel Braker
SV Z BRAKE
APPROVED
CHECKED
DRAWN
C.L
H.J.L.
CHIA LERN MACHINERY CO; LTD.
Edit 2023/10/23
Page5/8
Title
Double Servo Automatical Cut-off Machine
NO
Model
CH-CM0207

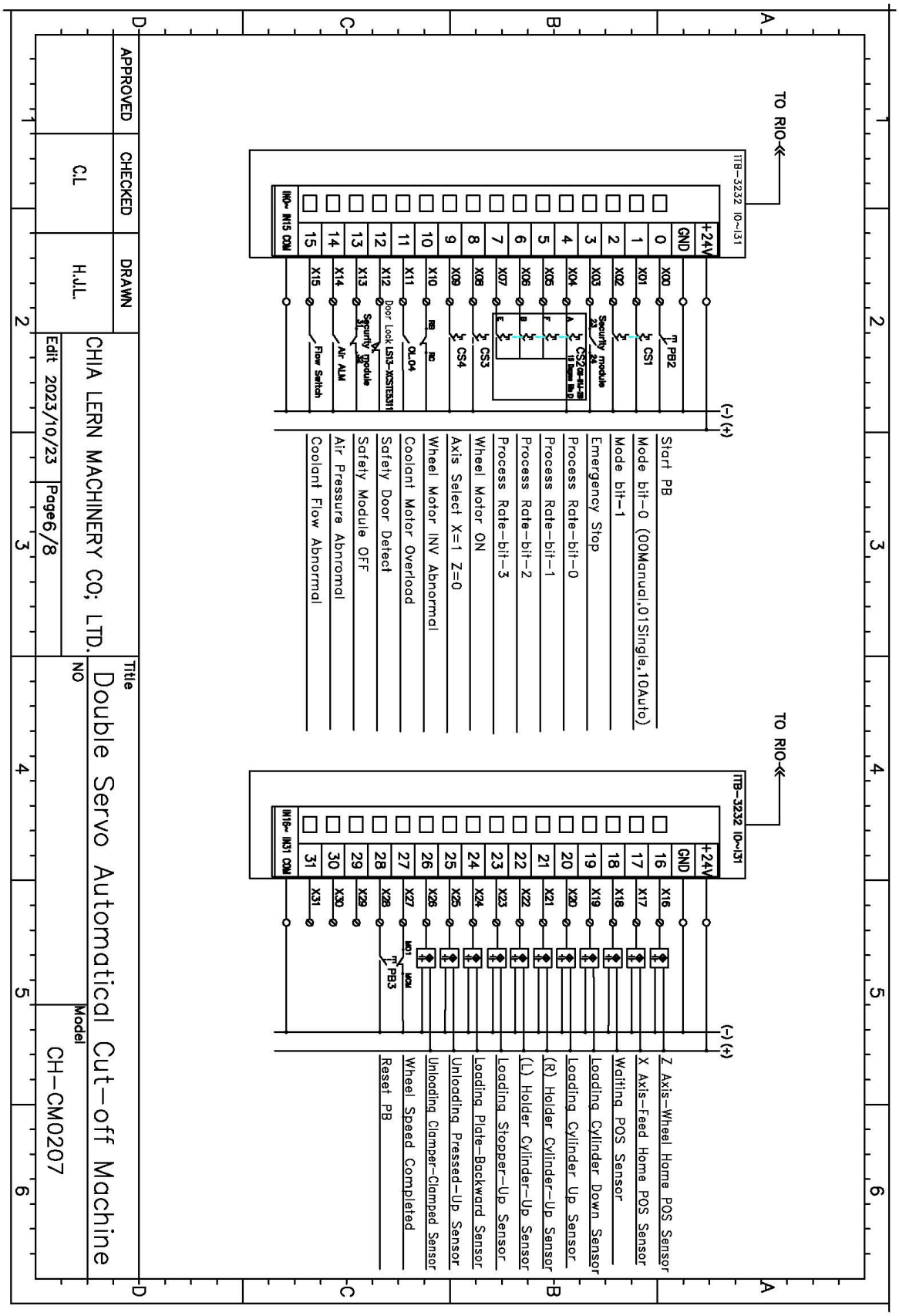
TO RIO
ITB-3232 I0~I31
+24V
GND
(-) (+)
Start PB
Mode bit-0 (00Manual,01Single,10Auto)
Mode bit-1
Emergency Stop
Process Rate-bit-0
Process Rate-bit-1
Process Rate-bit-2
Process Rate-bit-3
Wheel Motor ON
Axis Select X=1 Z=0
Wheel Motor INV Abnormal
Coolant Motor Overload
Safety Door Detect
Safety Module OFF
Air Pressure Abnormal
Coolant Flow Abnormal
Z Axis-Wheel Home POS Sensor
X Axis-Feed Home POS Sensor
Waiting POS Sensor
Loading Cylinder Down Sensor
Loading Cylinder Up Sensor
(R) Holder Cylinder-Up Sensor
(L) Holder Cylinder-Up Sensor
Loading Stopper-Up Sensor
Loading Plate-Backward Sensor
Unloading Pressed-Up Sensor
Unloading Clamper-Clamped Sensor
Wheel Speed Completed
Reset PB
APPROVED
CHECKED
C.L
DRAWN
H.J.L.
CHIA LERN MACHINERY CO; LTD.
Edit 2023/10/23
Page6/8
Title
Double Servo Automatical Cut-off Machine
NO
Model
CH-CM0207

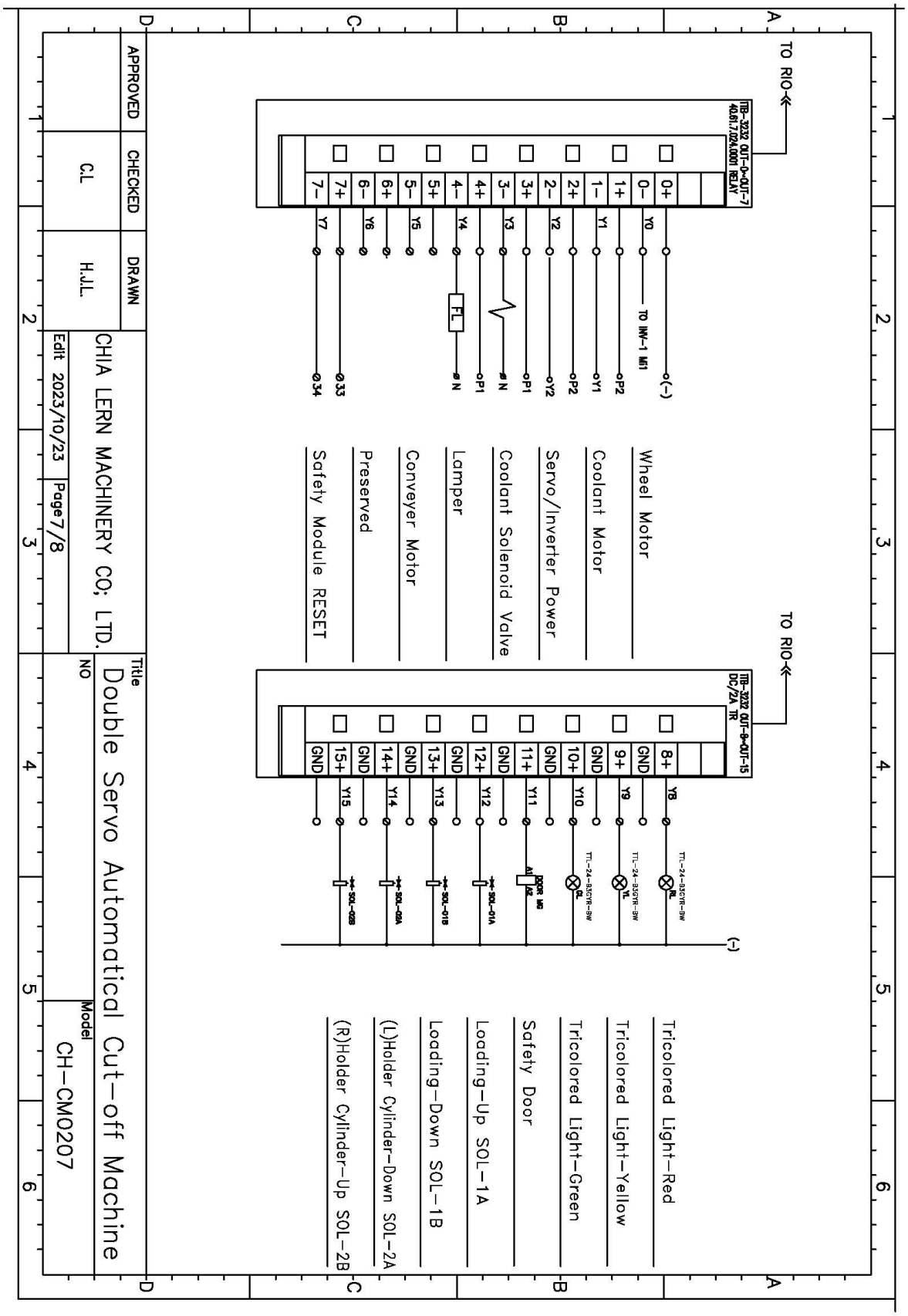
TO RIO
TTB-3232 OUT-0~OUT-7
40.61.7.024.0001 RELAY
0+
0-
1+
1-
2+
2-
3+
3-
4+
4-
5+
5-
6+
6-
7+
7-
Y0
Y1
Y2
Y3
Y4
Y5
Y6
Y7
TO INV-1 M1
FL
(-)
P2
Y1
P2
Y2
P1
N
P1
N
33
34
Wheel Motor
Coolant Motor
Servo/Inverter Power
Coolant Solenoid Valve
Lamper
Conveyer Motor
Preserved
Safety Module RESET
TO RIO
TTB-3232 OUT-8~OUT-15
DC/2A TR
8+
GND
9+
GND
10+
GND
11+
GND
12+
GND
13+
GND
14+
GND
15+
GND
Y8
Y9
Y10
Y11
Y12
Y13
Y14
Y15
TTL-24-83GYR-BW
RL
TTL-24-83GYR-BW
YL
TTL-24-83GYR-BW
GL
DOOR MG
A1
A2
SOL-01A
SOL-01B
SOL-02A
SOL-02B
(-)
Tricolored Light-Red
Tricolored Light-Yellow
Tricolored Light-Green
Safety Door
Loading-Up SOL-1A
Loading-Down SOL-1B
(L)Holder Cylinder-Down SOL-2A
(R)Holder Cylinder-Up SOL-2B
APPROVED
CHECKED
DRAWN
C.L
H.J.L.
CHIA LERN MACHINERY CO; LTD.
Edit 2023/10/23
Page7/8
Title
Double Servo Automatical Cut-off Machine
NO
Model
CH-CM0207

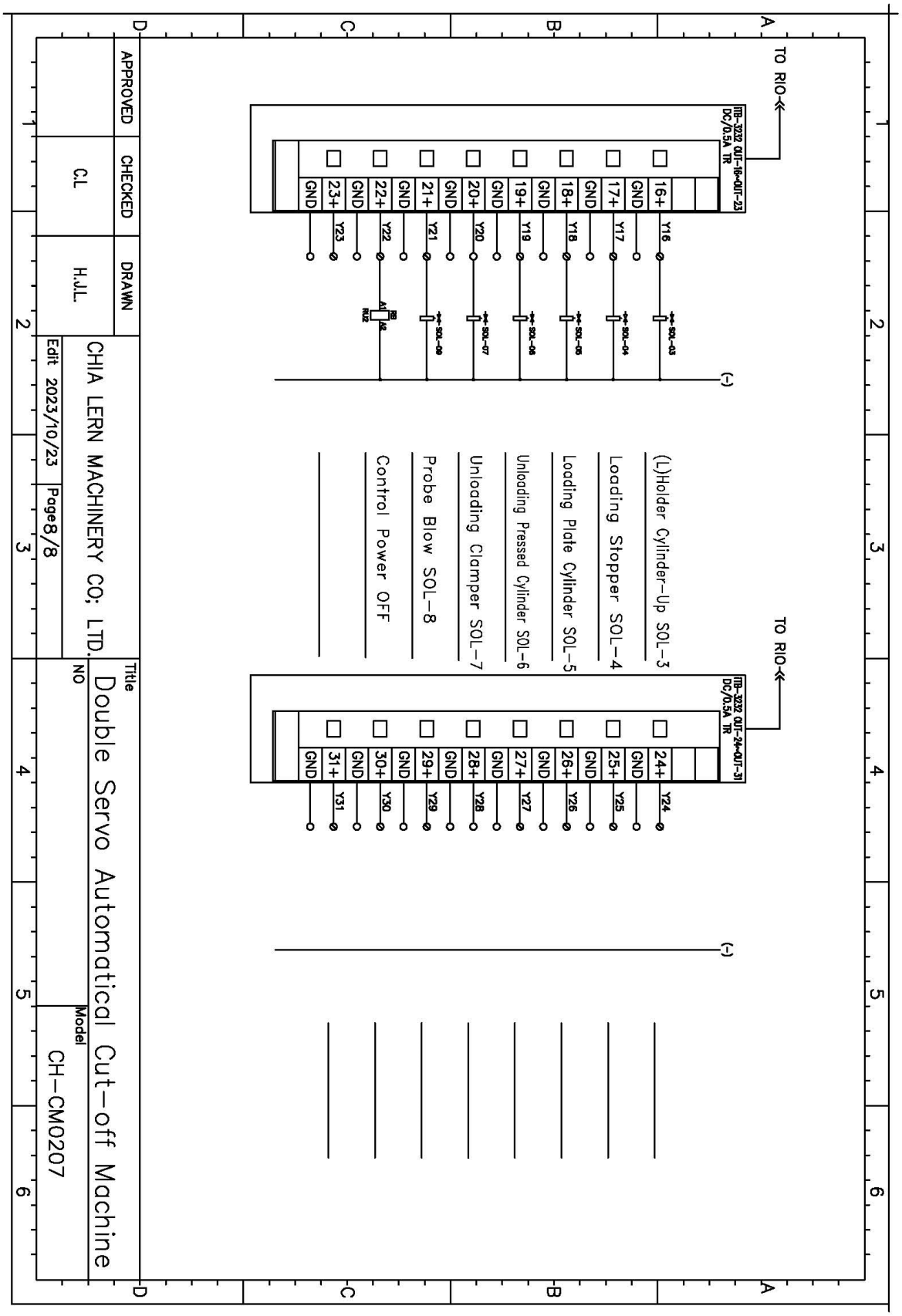
TO RIO
ITB-3232 OUT-16~OUT-23
DC/0.5A TR
16+ GND 17+ GND 18+ GND 19+ GND 20+ GND 21+ GND 22+ GND 23+ GND
Y16 Y17 Y18 Y19 Y20 Y21 Y22 Y23
SOL-03 SOL-04 SOL-05 SOL-06 SOL-07 SOL-08 SOL-09
(-)
(L)Holder Cylinder-Up SOL-3
Loading Stopper SOL-4
Loading Plate Cylinder SOL-5
Unloading Pressed Cylinder SOL-6
Unloading Clamper SOL-7
Probe Blow SOL-8
Control Power OFF
TO RIO
ITB-3232 OUT-24~OUT-31
DC/0.5A TR
24+ GND 25+ GND 26+ GND 27+ GND 28+ GND 29+ GND 30+ GND 31+ GND
Y24 Y25 Y26 Y27 Y28 Y29 Y30 Y31
(-)
APPROVED
CHECKED
DRAWN
C.L
H.J.L.
CHIA LERN MACHINERY CO; LTD.
Edit 2023/10/23
Page8/8
Title
Double Servo Automatical Cut-off Machine
NO
Model
CH-CM0207

8. Daily Maintain

To make sure each procedure is in perfect condition, the machine must be maintained frequently.

No.	Item	Work	Frequency	Note
1.	V Block	Clean	Everyday	
2.	Coolant Oil	Check	Everyday	Check the coolant oil quantity and quality.
		Check	6 months	Coolant oil went off by using long term, exchange the oil after using about 1 year.
4	Pressure Boost of Oil Pressure Cylinder	Check	Every Month	When pressure boost is lower than 1/3, please add R32 hydraulic oil to 2/3.
5.	Electric lubricator	Check	Everyday	Check the lubricating oil, if it is lower than 1/3, please add it.
6	Oil Recycling Tank	Discharge	Everyday	Discharge the oil from the oil recycling tank.
7	General Clean	Clean	Every Week	Clean auto loading mechanism. Clean surroundings of machine.
8	Cutting Wheel Mechanism	Clean	Every Month	Clean mechanism.
9	Flexible Cover	Exchange	Every 2 Years	Clean the cutting oil with an air blower when finishing work every day and check if machine is abnormal or broken.

******** Supplies

Table of Suppliers

No	Item	Mode
1.	Rail Lubricating Oil	
2.	Cutting Wheel	
3	Flexible Cover	

*The rail of linear module should be irregularly lubricated, otherwise, rolling increase the abrasion would cause lift time shorter.

*Suggestion: fill up the rail lubricating oil twice a week.