FC-350W Wheel Truer and Dresser

Operation & Parts Manual

Machine Serial No. 25024

Rush Machinery, Inc.
4761 Route 364
Rushville, NY 14544 USA

Tel: 800-929-3070 (Toll Free - USA & Canada)
or +1 585-554-3070
Fax: +1 585-554-4077

Email: mail@rushmachinery.com
Website: www.rushmachinery.com

Table of Contents

1. Safety....2
   1.1 Preliminary Precautions....2
   1.2 Maintenance and Repair Precautions....2
   1.3 General Operating Precautions....2

2. Lifting....3

3. Leveling....4

4. Connecting Electrical Inputs....4

5. Safety Lockout....5

6. General Operating Conditions....5

7. Description of Major Components....6
   7.1 Dressing Head Assembly....6
   7.2 Work Slide Assembly....6
   7.3 Dust Removal....6
   7.4 Video Camera System....6

8. Machine Diagram....7

9. Control Panel Components....8

10. Control Panel Precautions....9
   10.1 Dressing Wheel Spindle Speed....9
   10.2 Work Piece Spindle Speed....9
   10.3 Emergency Stop Button....9

11. Sequence of Operations....9

12. Proper Wheel Speed Ratios....11
   12.1 Creating Proper Grinding Conditions....11
   12.2 Determining Proper Work Piece Wheel Speed....11
   12.3 Determining the Proper Truing and Dressing Wheel....12
   12.4 Rush Machinery Wheel Truing and Dressing Machines Wheel Dimensions....12
   12.5 Rush Machinery Dressing Wheels....12

13. Proper Care of the FC-350W....13
   13.1 Cleaning....13
   13.2 Adjusting or Replacing the Belts....13
   13.3 Adjusting Oscillation Ballscrew....14
   13.4 Adjusting Dressing Wheel Infeed Ballscrew....16
   13.5 Lubricating the FC-350W....17

13. Rush Machinery Warranty....18

Appendix A: Parts Lists and Diagrams....20

Appendix B: Electrical Schematic....28

Appendix C: Unidirectional Wheel Speed Chart....31

Appendix D: Optional Accessories....41

1. Safety

Failure to read, understand, and follow any and all instructions and warnings in this or any section of the manual voids all manufacturer warranties. The makers of this product cannot be held responsible for damage or injury resulting from incorrect use or failure to observe all operating procedures and precautions contained herein.

1.1 Preliminary Precautions

Only qualified electrical personnel familiar with the construction and operation of this equipment and the hazards involved should install, adjust, operate, and/or service this equipment. Please read and understand this manual in its entirety before proceeding. The user is responsible for applicable local codes. Wiring, grounding, disconnects, and over current protection are of particular importance. Failure to observe this precaution could result in severe bodily injury or loss of life.

NOTE: Customer must provide wiring and strain relief connector to provide power to the control panel. All wiring must be done in accordance with any applicable local electrical codes.

1.2 Maintenance and Repair Precautions

Turn off power to the machine before checking or making any machine repairs or adjustments.

This equipment is at line voltage when AC power is connected to the machine. Verify that there is no voltage present at input leads. **Disconnect and lockout the power from the machine before repairing or adjusting anything on the machine.** Failure to observe this precaution could result in severe bodily injury or loss of life.

1.3 General Operating Precautions

Do not operate this machine without the dressing wheel guards and both belt guards in place at all times. It is strongly recommended to not operate the machine without the work piece guard in place. Under no circumstances should anyone place their hands or any part of their body into or near the spindles or wheel while the machine is running. Operator must wear proper eye protection and keep hands clear of all pinch points and moving parts. Operator must also not wear loose fitting clothing, jewelry, or anything else that could get caught on any part of the machine.

- Observe all points in the "Control Panel Precautions" and "Sequence of Operation" sections of the manual (and the rest of the manual in its entirety) before operating the machine.

- Do not exceed the maximum operating speed of a wheel (the maximum speed is listed on the side of the wheel). The wheel could explode, causing injury to the operator.

- When using unidirectional rotation, it is possible loosen the wheel arbor retaining nut on the work piece arbor during dressing. To prevent this problem, be sure the wheel arbor nut is tight, and do not overfeed the dressing wheel into the work piece.

- **The emergency stop button disconnects power to the control circuit only. Power is still retained within the machine.** Never attempt to perform repairs on the machine unless all power to the machine is disconnected.

- Use the emergency stop button to disconnect power to the control circuit when performing job setups or changeovers. DO NOT use the master start "OFF" button on the control panel for this purpose.

- Be sure the area is clear of all personnel and that nobody is standing in the line of either wheel during the starting up of the work or grinding spindle. The operator **must** observe that the maximum wheel speed is clearly marked and equals or exceeds the maximum operating speed of the spindle. Any new wheel should be speed tested by running at full spindle speed for at least one minute before applying any work to either spindle. Failure to do so can lead the wheel to explode, causing damage to the machine and serious injury to the operator or others in close vicinity of the machine. All wheels should be mounted in accordance with all ANSI and OSHA standards.

- The operator must turn off the master disconnect before removing any guards from the machine.

2. Lifting

The machine should be lifted only using the fork pocket and angle brackets provided as shown:

3. Leveling

To level the FC-350W & FC-350EX, do the following:

1. Place a precision level on top of the work piece spindle housing.

2. Adjust the leveling bolts until the machine is leveled in all directions. Be sure the ends of the leveling bolts are resting in the recessed center of the cast iron pads.

3. Check to be sure that the machine is level and that it does not rock or sway.

4. Tighten the leveling bolt jam nuts and double check the level.

4. Connecting Electrical Inputs

1. Verify that the input power to the machine corresponds to the machine's stated voltage and frequency, and that the plant supply is of sufficient capacity to support the input current requirements of the machine.

2. Provide a transformer between the plant power supply and the machine if the correct input line voltage is not available.

3. Size upstream branch circuit protection (fuses) according to applicable local and federal standards.

4. Wire the input leads. Connect to the line terminals and ground to the main control panel disconnect.

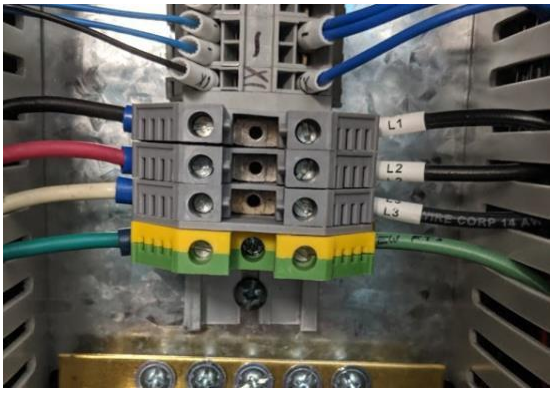

5. Check that there is adequate clearance to operate the machine safely.

6. Check and verify that the wiring to the line side of the terminal strip and the ground wire to the terminal strip is correct.

7. Check that the line wires are properly secured in the terminal strip.

8. Check that user-supplied branch circuit protection is installed and correctly rated.

9. Check that the incoming AC power is rated correctly.

10. Check that the rating of the transformer (if used) matches the machine's requirements, and is connected for the proper voltage.

11. Verify that a properly sized ground wire is installed and that a suitable earth ground is used. Verify that all ground leads are run unbroken.

12. With the incoming power turned on, use a voltmeter to verify that the supply voltage at the "disconnect" is within 10% of the supply voltage rating for the machine.

13. Close the main control panel door and wait for Rush Machinery personnel to complete setup and training.

5. Safety Lockout

The electrical safety lockout is provided on the main control panel door as shown:

6. General Operating Conditions

1. Optimum temperature range 40 to 104° F (5 to 40°C), during full or no load.
2. Electrical equipment capable of operating in humidity range of 20-95 percent.

7. Description of Major Components

Both spindles are powered by three-phase AC motors. Both motors have variable speed adjustments controlled by frequency inverters. The oscillating slide is controlled by an AC motor and frequency inverter.

The FC-350W comes with either a HSK-50 type or ISO-40 Taper type work piece spindle. Adaptors can be provided to accommodate user's wheel arbors.

7.1 Dressing Head Assembly

The dressing head is mounted on large, precision ground ball bearings that are pre-loaded for maximum rigidity. The assembly can swivel up to 180 degrees and locks via an adjustable locking lever on the base. Travel speed of the oscillating slide is adjustable through the use of a speed control knob on the control panel. For dressing a radius, the dressing unit can be swiveled manually.

7.2 Work Slide Assembly

Both X and Y axis on the work slide move on frictionless linear slide assemblies and are driven by anti-backlash ball screws equipped with digital readouts for positioning accuracy.

7.3 Dust Removal

The FC-350W has an efficient dust collection system to minimize exposure of machine components to harmful materials. Superior suction is attained by way of a 3-inch pipe connection.

7.4 Video Camera System

The video camera system zoom lens is computer-controlled through the RushVision software using a stepper motor and drive.

8. Machine Diagram

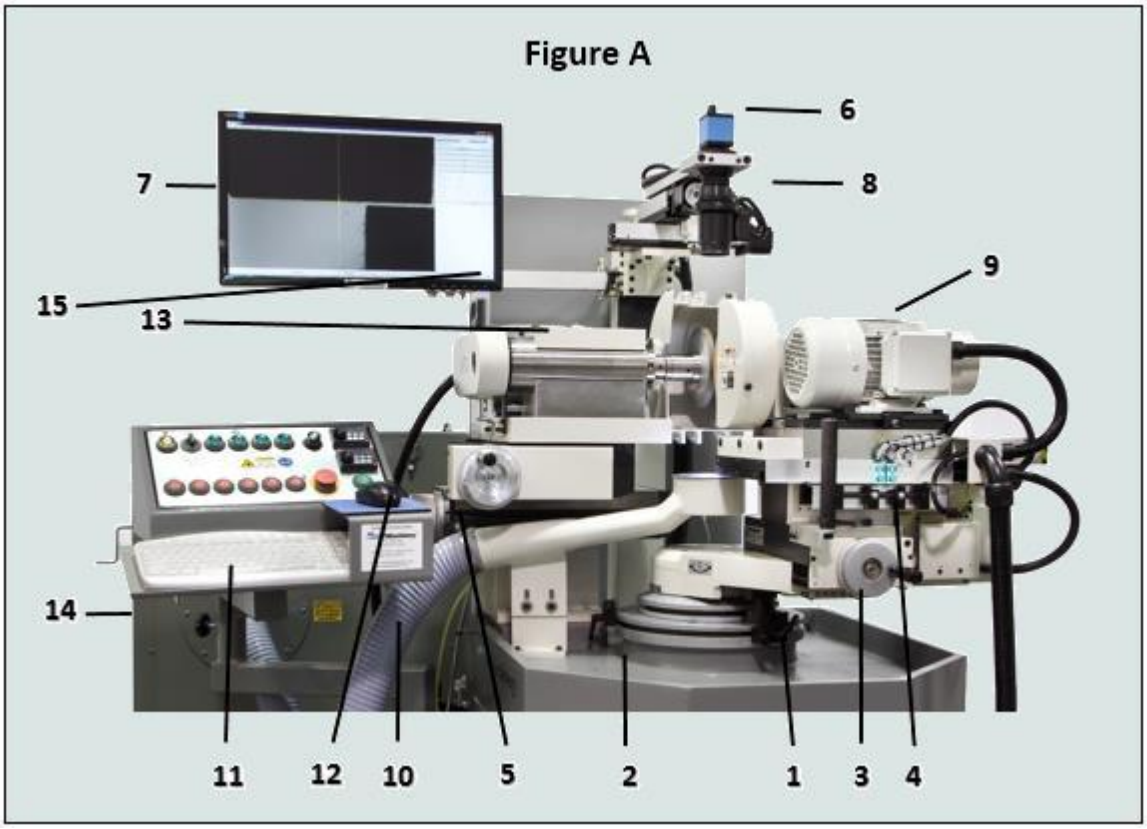

1. Dressing head angle locking lever
2. Dressing head angle stop (used to limit angular travel of the dressing wheel)
3. Dressing head infeed hand wheel
4. Dressing head oscillation adjustment sensors (used to limit the position and length of oscillation travel)
5. Work piece X- and Y-axis feed hand wheels (Y-axis hand wheel moves wheel in and out; X-axis hand wheel moves wheel side to side)
6. Video camera
7. Monitor
8. Optical Auto View
9. Dressing wheel head
10. Dust collector pipe (3”)
11. Keyboard
12. Mouse
13. Work piece wheel head
14. Optical Dust Collector
15. USB Port

9. Control Panel Components

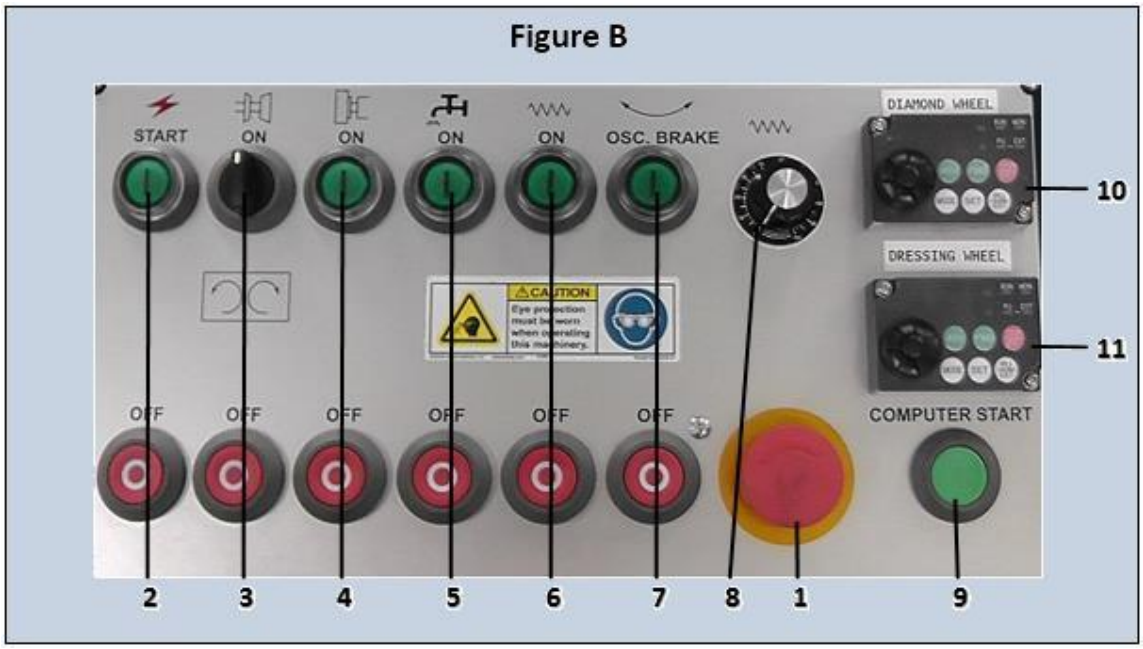

The FC-350W control panel consists of Master start, dressing wheel spindle, coolant/vacuum and dressing wheel oscillation and "ON" and "OFF" buttons. There is a selector switch for starting the work piece wheel in the "FWD" or "REV" direction and an "OFF" button for these functions. There are also speed controls for the work piece spindle, dressing wheel spindle and dressing wheel oscillation. In addition, there is an emergency stop button on the control panel.

1. Emergency stop button: turns off power to control circuit and shuts off all motors.
2. Master start: turns control circuit power on.
3. Starts work piece spindle in "FWD" (forward) or "REV" (reverse) direction: This switch is spring-loaded as to return to the center position. The "OFF" push button must be depressed before the spindle can be started in the opposite direction.
4. Starts dressing wheel spindle
5. Starts coolant pump or vacuum system (optional)
6. Starts dressing wheel oscillation
7. Turns on the oscillation brake
8. Oscillation speed control knob
9. Remotely powers on the computer
10. Diamond wheel speed control knob and readout
11. Dressing wheel speed control knob and readout

10. Control Panel Precautions

10.1 Dressing Wheel Spindle Speed

Do not exceed the maximum operating speed of a wheel (the maximum speed is listed on the side of the wheel). The wheel could explode, causing injury to the operator.

10.2 Work Piece Spindle Speed

Do not exceed the maximum operating speed of a wheel (the maximum speed is listed on the side of the wheel). The wheel could explode, causing injury to the operator.

10.3 Emergency Stop Button

The emergency stop button disconnects power to the control circuit only! Power is still retained within the machine. Never attempt to perform repairs on the machine unless all power to the machine is disconnected.

Use the emergency stop to disconnect power to the control circuit before performing job setups or changeovers.

11. Sequence of Operations

1. With the emergency stop depressed and/or the "disconnect" in the off position, the operator selects and mounts wheels on the grinding and work spindles. This must be done in compliance with all applicable articles of the American National Standard safety requirements for the use, care, and protection of abrasive wheels.

2. With the wheels mounted, both wheel guards and both belt guards in place, the operator turns on the "disconnect," releases the emergency stop button, and pushes the master start button. Operator must wear proper eye protection and keep hands clear of all pinch points and moving parts. Operator must not wear loose fitting clothing, jewelry, or other articles that could get caught on any part of the machine.

3. Now position the work piece, using the video system as a visual guide, to the proper location.

4. The operator now sets the angle stop(s) on the dressing unit (if required). Be careful not to damage the wheels during setup.

5. Now the dressing wheel oscillation is set. Start with a small stroke and slow speed, and then carefully increase the stroke length and adjust the position to cover the width of the work piece wheel that is to be dressed. The oscillation speed can then be set to suit the application.

6. If dressing a radius, carefully swivel the dressing head between the angle stops, watching for any interference.

7. The dressing unit angle locking lever should be tightened when the machine is turned off or left unattended, to prevent unexpected movement of the dressing unit. The machine should **NEVER** be left on in the operator's absence.

8. The operator now sets the dressing wheel and work piece spindle speeds, using the knobs on the control panel. Be sure to observe safe operating speed requirements when setting spindle RPMs. The operator **must** observe that the maximum wheel speed is clearly marked and equals or exceeds the maximum operating speed of the spindle. Any new wheel should be speed tested by running at full spindle speed for at least one minute before applying any work to either spindle. Failure to do so can lead the wheel to explode, causing damage to the machine and serious injury to the operator or others in close vicinity of the machine. All wheels should be mounted in accordance with all ANSI and OSHA standards.

9. Be sure that the work area is clear of all personnel and that nobody is standing in the line of either wheel before starting up the work piece or dressing wheel spindle.

10. The operator may now begin grinding by operating the slides and observing the drawing overlay on the video system to produce the desired part form. Note that the operator may stop oscillating table motion at any time by push the "OFF" button for that function on the control panel.

11. When the part is finished the operator should stop the oscillating slide and lock the dressing unit angle position, if it is not already locked. They can then turn off the spindle motors individually using the control panel "OFF" buttons, or use the control panel master stop button to disable all controls at once.

12. The operator must now turn off the master disconnect before removing the guards from the machine.

12. Proper Wheel Speed Ratios (Unidirectional FWD Rotation)

12.1 Creating Proper Grinding Conditions

Unidirectional (FWD) rotation is the ideal relationship between the work piece wheel and the dressing wheel. Unidirectional rotation allows the abrasive materials in the dressing wheel to infiltrate the work piece wheel's matrix, much like two gears meshing. This infiltration means the bond tail of the work piece wheel is dressed instead of just the diamond or CBN particles. Dressing the bond tail is the key to good bond tail integrity.

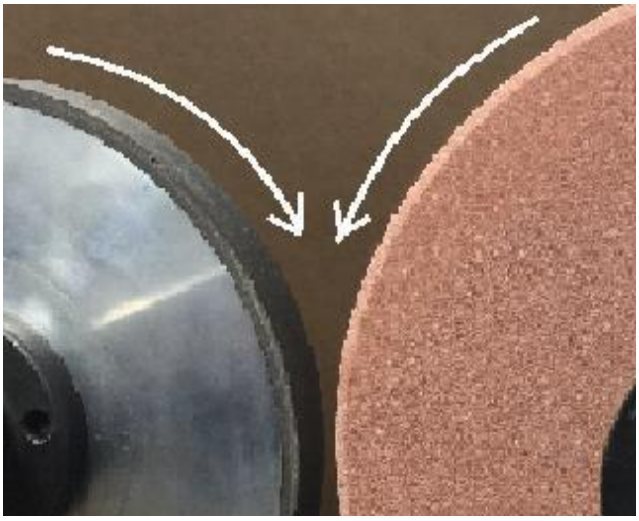

Work Piece Wheel **Grinding Wheel**

12.2 Determining Proper Work Piece Wheel Speed

It is important that the work piece wheel and the dressing wheel rotate in the same direction, unidirectional, as shown.

IMPORTANT: When using unidirectional rotation, it is possible to unintentionally loosen the wheel arbor retaining nut on the work piece arbor during dressing. To prevent this problem, be sure the wheel arbor nut is tight, and do not overfeed the dressing wheel into the work piece.

The circumferential speed of the work piece wheel should be approximately 70% of the surface speed of the dressing wheel.

When determining optimal wheel speed, it is best to start with a closer work piece to dressing wheel speed ratio and work your way up in speed until you get the results you want. Start out with the work piece wheel around 900 RPM and the dressing wheel around 1200 RPM. Work your way up in speed on the dressing wheel slowly – about 200 RPM intervals – until you get the

ideal dressing speed and efficiency. Make the speeds closer for a slower, but truer and more efficient dress and further apart for faster stock removal but less efficient / true edge
Bear in mind that, while higher speeds increase the rate of stock removal and produce more immediate results, more material is wasted in the process. **NOTE: the speed ratio to efficiency is not a linear scale; i.e., doubling the speed will not produce twice the stock removal, etc. Also be aware that wheel speed is not directly proportional to wheel size either; do not try to double the speed for a wheel that's half the size of the other.**

Adjusting for proper wheel speed ratios is not an exact science. Many factors such as hardness and composition of the diamond and abrasive wheel, oscillating speed, wheel temperature, etc. have an effect on the ideal operating speed ratios; thus it requires some trial and error. However, once you find the right speed ratio for a specific wheel of a given size you can consistently use it as a guideline for those wheels. Keeping a record is recommended.

12.3 Determining the Proper Truing and Dressing Wheel

Important factors for the proper truing and dressing of diamond or CBN wheels are grit size, hardness, and composition of the dressing wheel. Diamond or CBN wheels (with different grit size and composition) act differently when dressed; therefore, the use of different dressing wheels is needed to compensate. By varying the dressing wheel's grit size and hardness, you can accommodate for varying diamond and CBN wheels. The chart below demonstrates some standard wheels as a guideline for dressing wheel grit size.

12.4 Rush Machinery Wheel Truing and Dressing Machines Wheel Dimensions

Type 1A1, 8" diameter, up to ½" wide, with a 1-1/4" bore.

12.5 Rush Machinery Dressing Wheels

Part Number	Dressing Wheel Type, Grit and Size	Use for Diamond Wheel (Bond, Grit):
	Aluminum Oxide	
WTM08001	60 Grit – 8" X 1/2" X 1-1/4"	Resin & softer metal bonds, 80 - 150
WTM08002	80 Grit – 8" X 1/2" X 1-1/4"	Resin & softer metal bonds, 100 - 180
WTM08003	100 Grit – 8" X 1/2" X 1-1/4"	Resin & softer metal bonds, 120 - 220
WTM08035	100 Grit – 8" X 1/4" X 1-1/4"	Resin & softer metal bonds, 120 - 220
WTM08004	120 Grit – 8" X 1/2" X 1-1/4"	Resin & softer metal bonds, 150 - 320
WTM08014	120 Grit – 8" X 3/8" X 1-1/4"	Resin & softer metal bonds, 150 - 320
WTM08034	120 Grit – 8" X 1/4" X 1-1/4"	Resin & softer metal bonds, 150 - 320
WTM08005	150 Grit – 8" X 1/2" X 1-1/4"	Resin & softer metal bonds, 180 - 400

Part Number	Dressing Wheel Type, Grit and Size	Use for Diamond Wheel (Bond, Grit):
	Silicon Carbide	
WTM08012	54 Grit – 8” X 1/2” X 1-1/4"	Hard metal & vitrified bond, 80 - 150
WTM08013	100 Grit – 8” X 1/2” X 1-1/4"	Hard metal & vitrified bond, 120 - 220
WTM08110	220 Grit – 8” X 3/8” X 1-1/4"	Hard metal & vitrified bond, 400 - 600
WTM08111	320 Grit – 8” X 5/16” X 1-1/4"	All bonds, 600 - 1200

Rules of thumb:
- The dressing wheel grit size is 1/3 to 2/3 the size of the diamond/CBN wheel grit size
- The finer the diamond/CBN wheel grit size, the more the dressing wheel doesn’t matter.

13. Proper Care of the FC-350W

13.1 Cleaning

Simply use a suction hose to remove any dust or other debris. This should be done on a daily basis. Also wipe the exposed machined surfaces down with a rust inhibitor during the summer months.

13.2 Adjusting or Replacing the Belts

Only light tension is required! To adjust, do the following:
1. Disconnect power from machine.
2. Remove the screws from the belt safety guard cover.
3. Pull off the cover.
4. Loosen motor adjusting plate screws.
5. Pull the motor back until the belts are tight by using the adjusting screw.
6. Tighten the adjusting plate screw and replace the cover.
7. Check to see that the belts are clear of the guard.
8. Reconnect power to machine.

To replace a belt, do the following:
1. Disconnect the power from the machine.
2. Remove the screws from the belt safety guard cover.
3. Pull off the cover.
4. Loosen motor adjusting plate screws.
5. Loosen the adjustment screw and push motor forward until old belts are loose.
6. Remove the old belts.
7. Replace belts.
8. Follow Steps 5-8 from the previous section above.

13.3 Adjusting Oscillation Ballscrew

1. Remove (4) screws holding the upper shield in place.

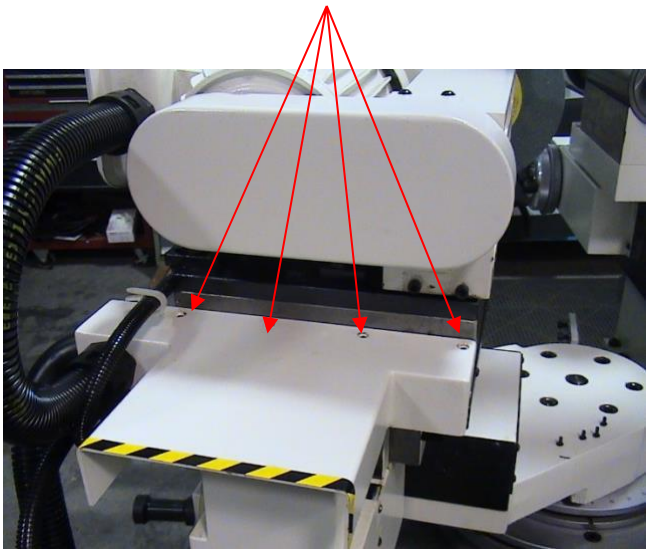

2. Remove (4) screws holding the outer shield in place.

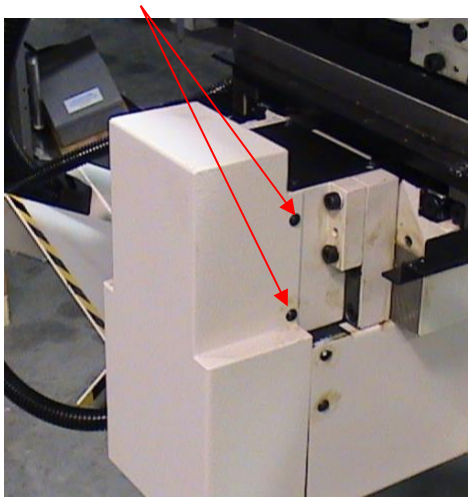

3. Remove (2) screws holding shaft cover in place.

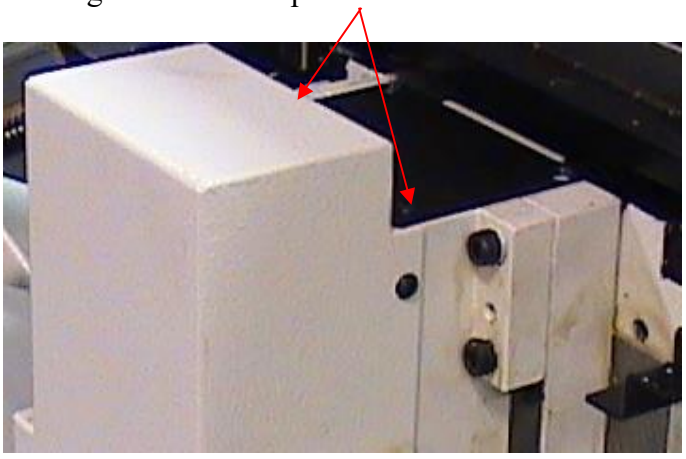

4. Loosen drive shaft screw.

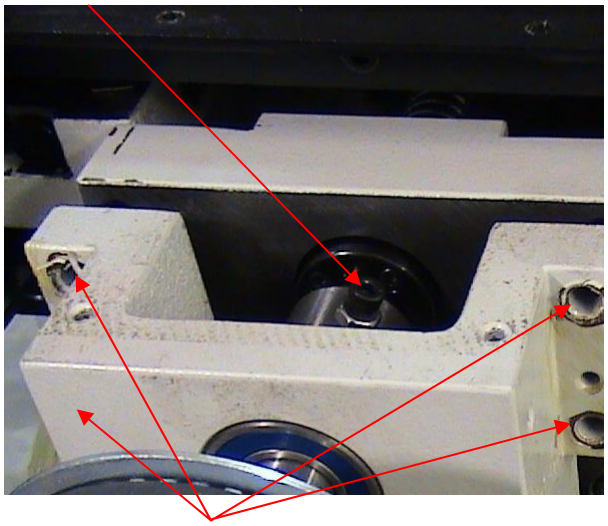

3. Remove (4) servo casting screws.

4. Slide away servo, casting, and coupler away from the ballscrew.

7. Loosen but do not remove the (4) ballscrew nut retaining screws

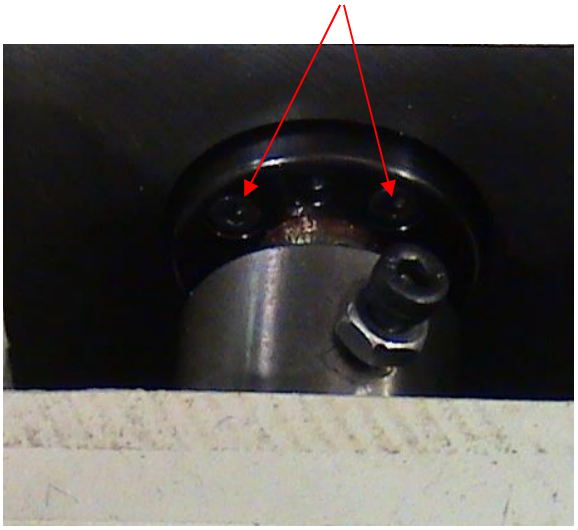

8. Remove plate on the z axis housing to expose the hex bolt on the end of the ball screw. Use a hex wrench to hold the ball screw while tightening the ballscrew nut with a spanner wrench. Back off the ballscrew nut slightly until all of the play is taken up but the ball screw still operates freely.

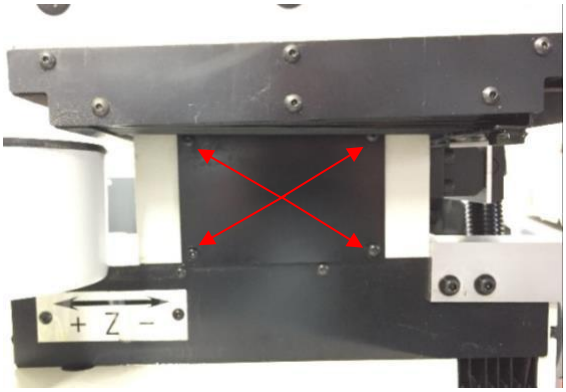

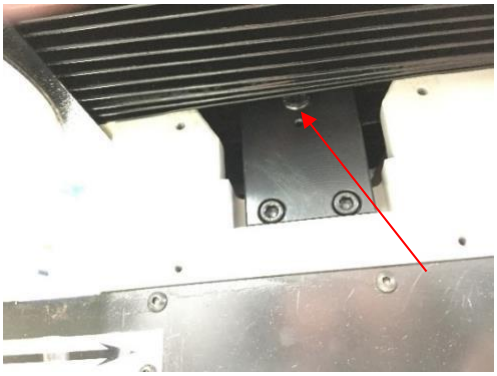

9. Tighten the ballscrew nut retaining screws loosened in step 7.

10. Reinstall servo / casting / shaft and all covers and check operation.

13.4 Adjusting Dressing Wheel Infeed Ballscrew

1. Remove dressing wheel infeed hand crank and washer.

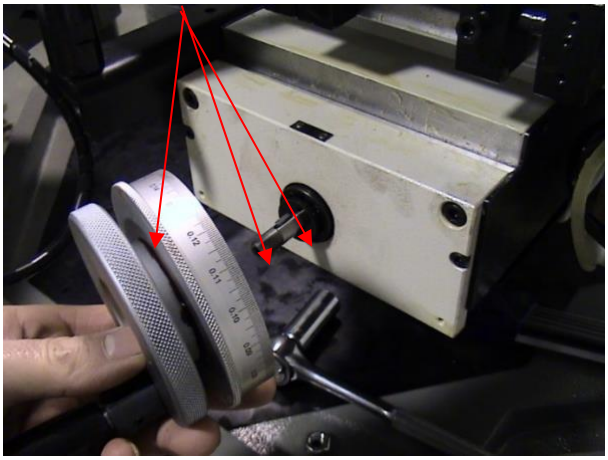

2. Pull apart hand crank assembly. Be careful not to misplace the ball and spring that will come out when disassembled.

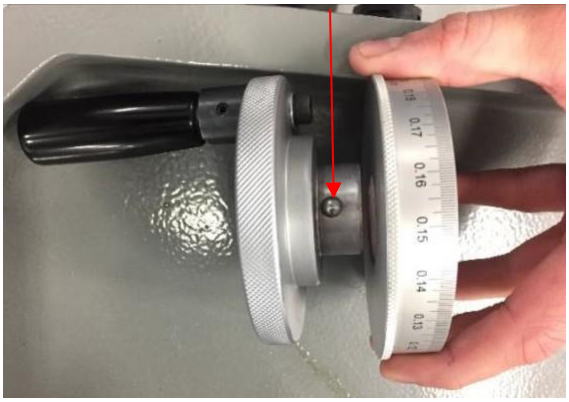

3. Loosen only (don't remove) (4) ballscrew nut retaining screws

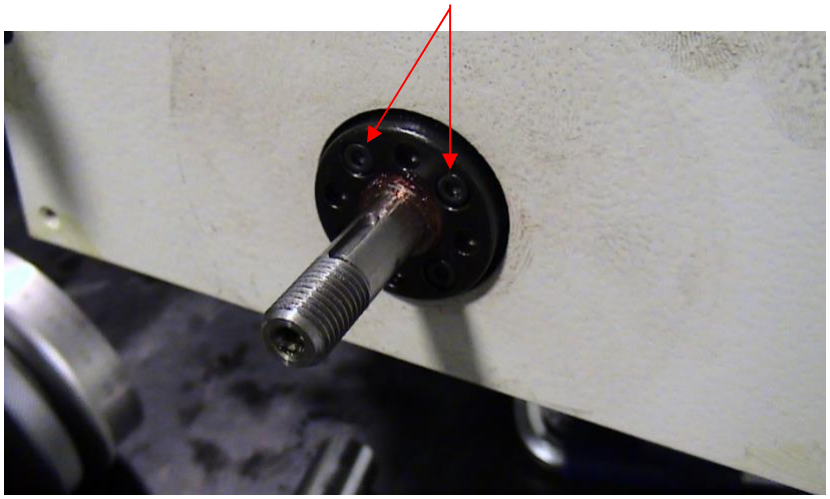

4. Grip ballscrew shaft using the hand crank and key.

5. Tighten the ballscrew nut with a spanner wrench. Tighten the nut all the way, then back off slightly until all of the play is taken up but the ballscrew still operates freely.

6. Tighten the (4) ballscrew nut retaining screws

7. Install thick spacer washer, shaft key and handwheel.

13.5 Lubricating the FC-350W

The FC-350W has a central oil lubricating system. Pull the lever on the oil pump 2-3 times, once a day. The recommended oil is Mobil Vactra No. 2, or the equivalent.

13. Rush Machinery Warranty

For one year from date of delivery of the FC-350W Diamond / CBN Wheel Truing and Dressing Machine, provided that the machine is installed and operated in accordance with the instruction manual, Rush Machinery will repair or replace any mechanical or electrical part(s) for the machine, if defective in material or workmanship, at no charge. To obtain service under this warranty, contact Rush Machinery, and, at our option, the defective part(s) may have to be returned with shipping charge prepaid by the user. Rush Machinery will, without charge, repair or replace defective part(s). This warranty does not apply to the following: shipping damage, damage or problems caused by abuse, accident, alteration, negligence, or failure to follow operating instructions. In no event will Rush Machinery, Inc. be liable for incidental or consequential damages.

Warning: the use of coolant oil or mixed coolants without proper fire suppression and mist collection is flammable and not recommended. The use of unapproved liquids may void the warranty.

For any maintenance, service, or parts needs, please contact the service department at:

Rush Machinery, Inc.
4761 Route 364
Rushville, NY 14544 USA

Tel: 800-929-3070 (Toll Free - USA & Canada)
or +1 585-554-3070
Fax: 585-554-4077

Email: mail@rushmachinery.com
Website: www.rushmachinery.com

Appendix A: Parts Lists and Diagrams

DRAWING NO. 1

ITEM	DESCRIPTION	DRAWING NUMBER
1	BASE CASTING	1
2	C AXIS	2
3	INFEED AXIS	3
4	DRESSING SPINDLE	4
5	CAMERA COLUMN	5
7	WORK AXES	6
9	WORK SPINDLE	7

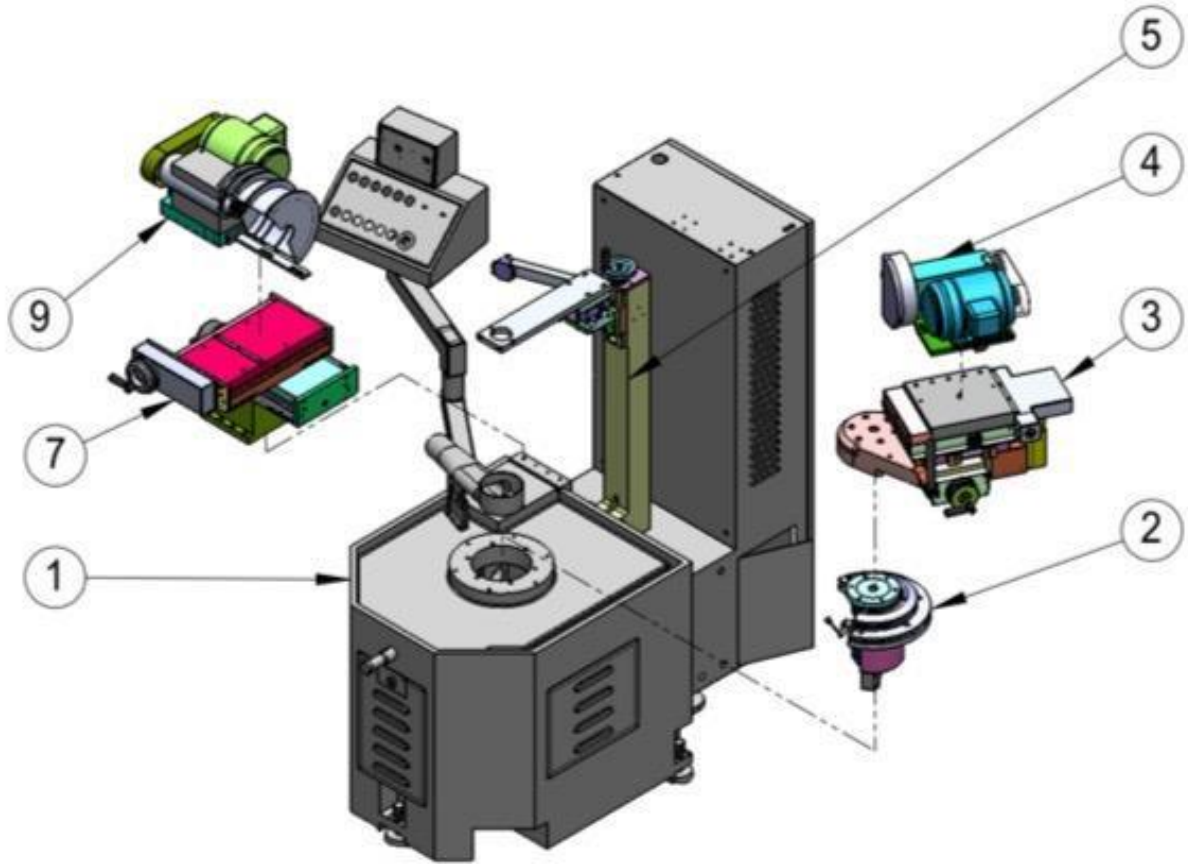

ITEM	PART NUMBER	DESCRIPTION	REQ'D
1	WTM02035	BEARING SLEEVE	1
2	WTM02036	INDEX PLATE	1
3	WTM02037	COLLAR	1
4	WTM02038	SPINDLE	1
5	WTM02039	OIL SEAL	1
6	WTM02040	PRECISION NUT	1
7	WTM02041	BALL BEARING	4
8	WTM02042	ENCODER MOUNT (MANUAL ONLY)	1
8.1	WTM02043	ENCODER BRACKET	1
8.2	WTM02044	ENCODER DRIVE PLATE	1
8.3	WTM02045	ENCODER DRIVE SHAFT	1

DRAWING NO. 2

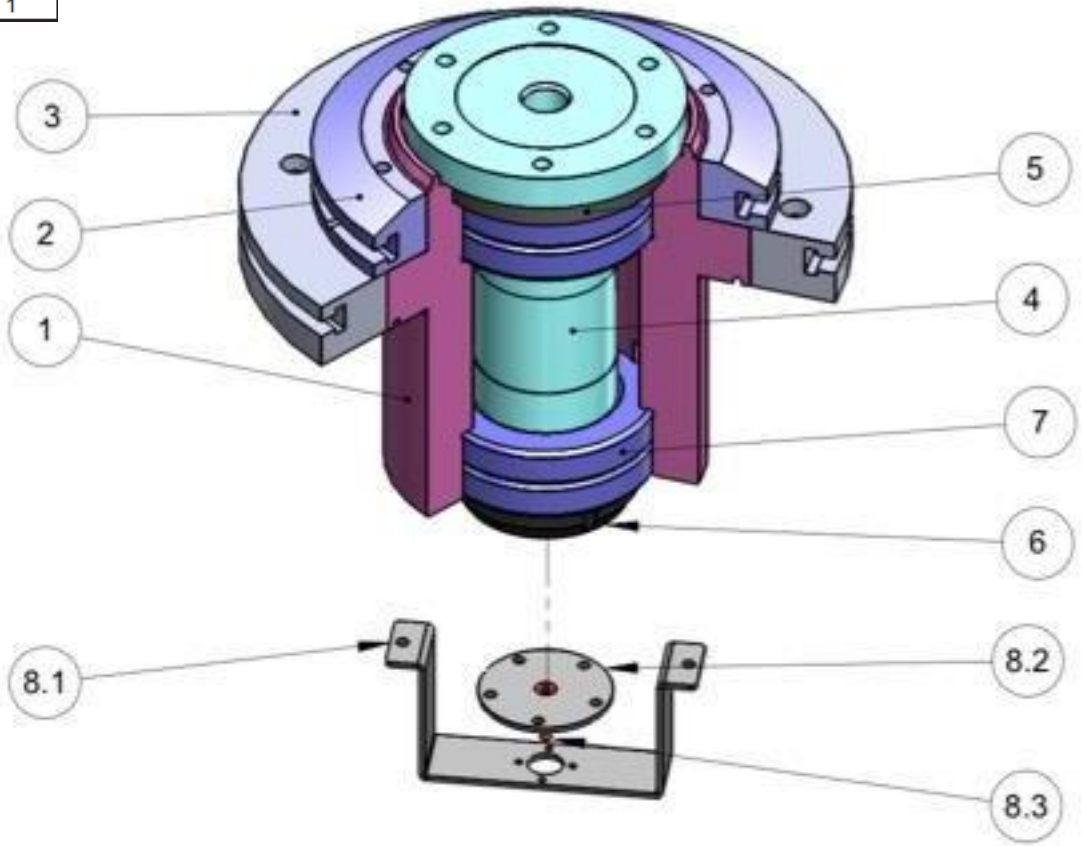

DRAWING NO. 3

ITEM	PART NUMBER	DESCRIPTION	REQ'D
1	WTM00008	BASE CASTING	1
2	WTM00009	FORK SUPPORT	2
3	WTM00010	FRONT COVER	1
4	WTM00011	LEFT COVER	1
5	WTM00012	RIGHT COVER	1
6	WTM00013	LEVELING PAD	3
7	WTM00014	LEVELING SCREW	3
8	WTM00015	LEVELING SCREW NUT	3
10	WTM00016	ELECTRICAL CABINET	1
16	WTM00017	FRONT CONDUIT PLATE	1
17	WTM00018	LIFTING LUG	3
18	WTM00019	CONTROL PANEL ARM MOUNT	1
20	WTM00020	CONTROL PANEL ARM SECTION (1)	1
23	WTM00021	CONTROL PANEL ARM COVER	5
24	WTM00022	CONTROL PANEL ARM SECTION (2)	1
25	WTM00023	CONTROL PANEL ENCLOSURE	1
27	WTM00024	CONTROL PANEL PLATE	1
28	WTM00025	UPPER CONTROL PANEL PLATE	1
29	WTM00026	UPPER CONTROL PANEL	1
30	WTM00027	DUST COLLECTOR CUP MOUNT	1
31	WTM00028	DUST COLLECTOR CUP	1
32	WTM00029	CENTRAL LUBRICATOR RESERVOIR	1
36	WTM00030	KEYBOARD TRAY	1
37	WTM00031	KEYBOARD TRAY MOUNT LEFT	1
38	WTM00032	KEYBOARD TRAY MOUNT RIGHT	1
39	WTM00033	HALOGEN LIGHT	2

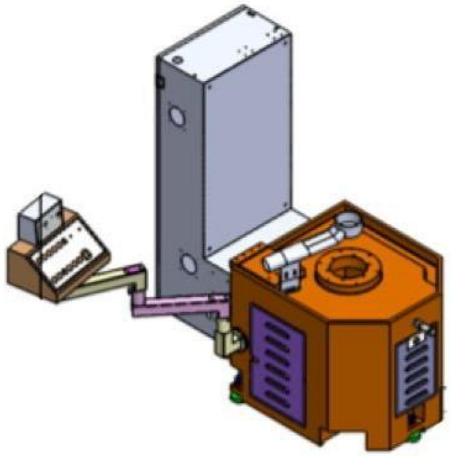

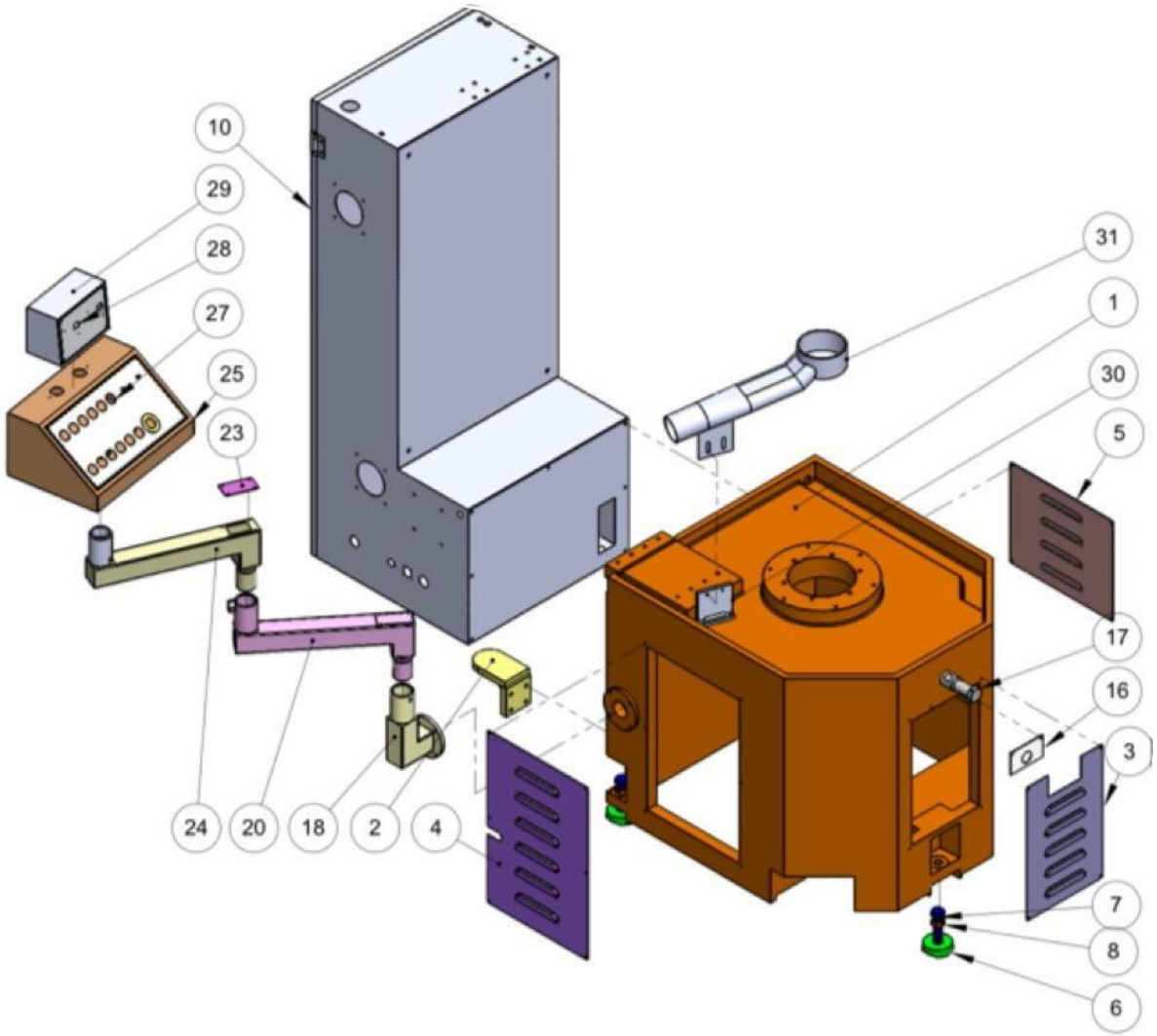

DRAWING NO. 4

ITEM	PART NUMBER	DESCRIPTION	REQ'D
1	WTM02046	INTERMEDIATE CASTING	1
2	WTM02047	LEFT OSC. B.S. BEARING SUPPORT PLATE	1
3	WTM02034	INFEED SUPPORT BEARING PLATE	1
4	WTM02049	RIGHT SIDE PANEL	1
5	WTM02050	FRONT INFEED SLIDE COVER	1
6	WTM02051	OSCILLATION BELLOWS INSIDE SUPPORT	2
7	WTM02052	LEFT OSCILLATOIN BALLSCREW COVER	1
8	WTM02053	LEFT SIDE PANEL	1
10	WTM02054	RIGHT OSC. B.S. BEARING SUPPORT PLATE	1
11	WTM02055	HANDLE BRACKET	1
12	WTM02056	HANDLE	1
13	WTM02057	CENTER PIVOT PIN	1
14	WTM02058	OSCILLATION BELLOWS OUTSIDE SUPPORT	1
15	WTM02059	OSCILLATION BELLOWS FRONT COVER	1
16	WTM02060	OSCILLATION BELLOWS REAR COVER	1
17	WTM02061	OSCILLATION DUST COVER LEFT	1
18	WTM02062	OSCILLATION DUST COVER RIGHT	1
19	WTM02063	OSCILLATION DUST COVER RIGHT MOUNT PLATE	1
20	WTM02064	OSCILLATION BALLSCREW NUT MOUNT	1
21	WTM02065	UPPER OSCILLATION SLIDE PLATE	1
22	WTM02066	INFEED DIAL	1
23	WTM02067	INFEED HAND WHEEL	1
25	WTM02025	INFEED / OSCILLATION SUPPORT BEARING	4
26	WTM02010	OSCILLATION REAR SUPPORT BEARING	1
27	WTM02033	OSCILLATION BEARING LOCK NUT	1
28	WTM02068	INFEED HANDLE	1
29	WTM02009	OSCILLATION BALLSCREW & NUT	1
30	WTM02024	INFEED BALLSCREW & NUT	1
31	WTM02008	OSCILLATION CROSSFEED BEARING SET	1
32	WTM02018	INFEED BEARING AND RAIL SET	1
34	WTM02029	INFEED BELLOWS COVER	1
35	WTM02070	OSCILLATION MOTOR	1
36	WTM02071	LUBE MANIFOLD MOUNT	1
37	WTM02072	OSCILLATION MOTOR PULLEY	1
38	WTM02073	OSCILLATION MOTOR COVER	1
39	WTM02074	OSCILLATION MOTOR MOUNT BRACKET	1
40	WTM02075	OSCILLATION DRIVE COVER	1
41	WTM02076	OSCILLATION BALLSCREW PULLEY	1
42	WTM02077	OSCILLATION PULLEY SHAFT COVER	1
43	WTM02031	OSCILLATION PULLEY SHAFT SUPPORT BEARING	1
44	WTM02078	MOUNTING BRACKET	1
45	WTM02079	OSCILLATION PULLEY SHAFT	1
46	WTM02080	C AXIS MAIN CASTING	1
51	WTM02081	TRIP MECH. MOUNTING BLOCK	2
52	WTM02082	TRIP MECH. MOUNTING PLATE	1
56	WTM02083	TRIP MECH. END BLOCK	2
57	WTM02084	TRIP MECH. SHAFT	1
58	WTM02085	TRIP MECH. SLIDING BLOCK	2
59	WTM02086	PROXIMITY SENSOR MOUNTING PLATE	1
60	WTM02011	PROXIMITY SENSOR	2

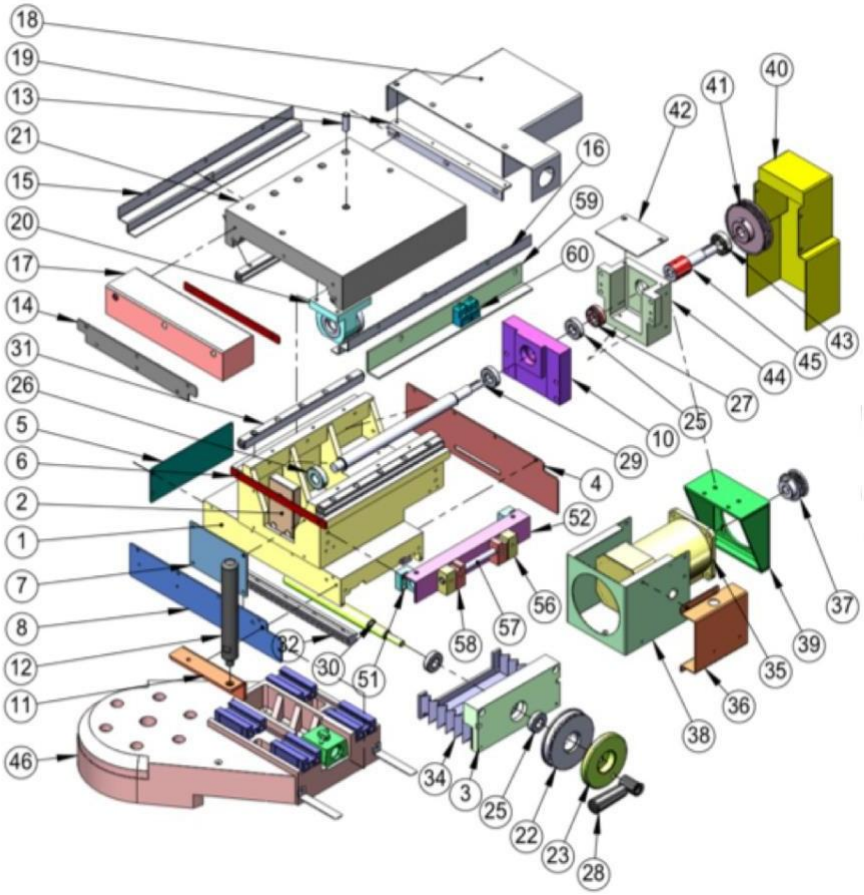

DRAWING NO. 5

ITEM	PART NUMBER	DESCRIPTION	REQ'D
1	WTM02087	BASE PLATE	1
2	WTM02088	KEY	1
3	WTM02089	BELT GUARD	1
4	WTM02090	MOTOR PULLEY	1
5	WTM02091	ADJUSTMENT PLATE	1
6	WTM02026	DRESSING MOTOR	1
7	WTM02092	MOTOR MOUNTING PLATE	1
8	WTM02093	SPINDLE HOUSING	1
9	WTM02094	SPINDLE	1
10	WTM02095	SPINDLE FRONT COVER	1
11	WTM02096	SPINDLE REAR COVER	1
12	WTM02032	SPINDLE BEARING	3
13	WTM02005	WHEEL HUB	1
14	WTM02028	SPINDLE PULLEY	1
16	WTM02097	WHEEL GUARD	1
17	WTM02098	WHEEL GUARD END COVER	1
19	WTM02099	WASHER	1
20	WTM02100	OIL SEAL	1
21	WTM02101	SPRING WASHER	1

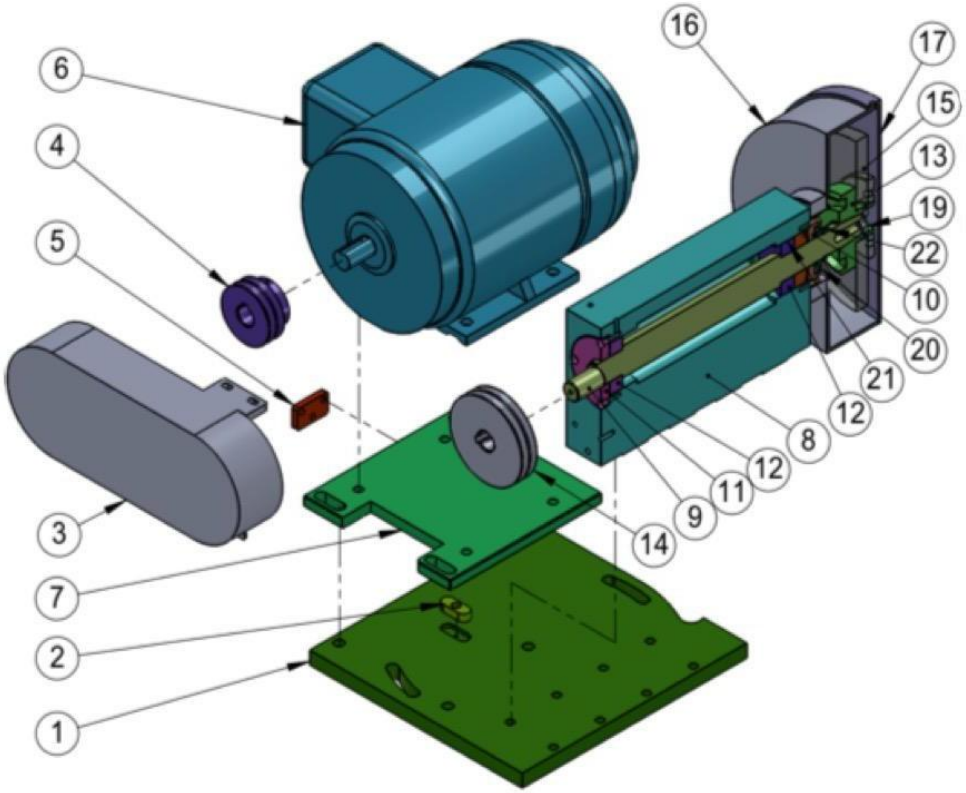

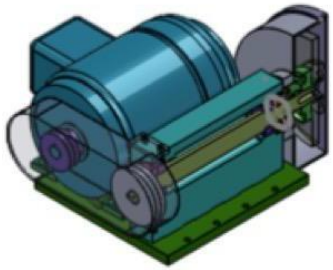

ITEM	PART NUMBER	DESCRIPTION	REQ'D
1	WTM00034	CAMERA COLUMN	1
2	WTM00035	VERTICAL SLIDE	1
3	WTM00036	GIB	3
4	WTM00037	CAMERA ARM MOUNTING BRACKET	1
5	WTM00038	LEAD SCREW NUT	1
7	WTM00039	LEAD SCREW ASSEMBLY	1
8	WTM00040	TOP PLATE	1
9	WTM00041	HAND WHEEL	1
10	WTM00042	LEAD SCREW CAP	1
11	WTM00043	WASHER	1
12	WTM00044	SLIDE COVER BRACKET	2
13	WTM00045	BALL BEARING	1
15	WTM00046	THRUST BEARING	5
16	WTM00047	WASHER	10
18	WTM00048	LOCKING LEVER	3
20	WTM00049	HANDLE	1
21	WTM00050	BOTTOM (X) SLIDE	1
22	WTM00051	BOTTOM (X) SLIDE FRONT PLATE	2
23	WTM00052	MIDDLE SLIDE	1
24	WTM00053	SLIDE END PLATE	2
26	WTM00054	HAND WHEEL	2
27	WTM00055	TOP (Y) SLIDE	1
28	WTM00056	SPACER PLATE	1
29	WTM00057	MONITOR MOUNTING ARM	1
31	WTM00059	CAMERA ARM	1

DRAWING NO. 6

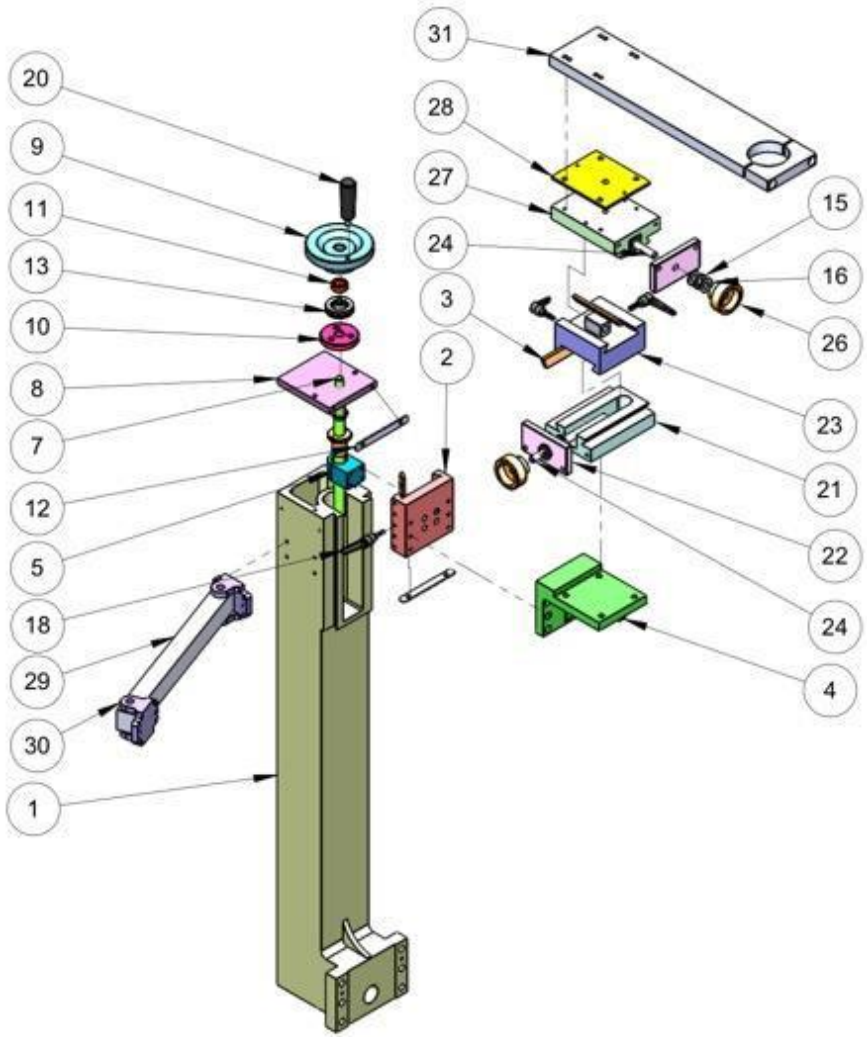

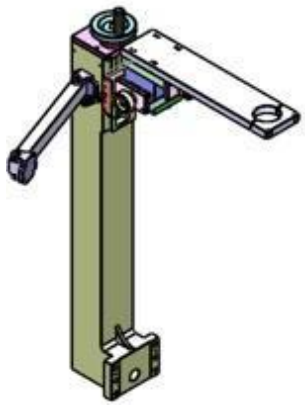

DRAWING NO. 7

ITEM	PART NUMBER	DESCRIPTION	REQ'D
1	WTM01033	BASE CASTING	1
2	WTM01034	BALL SCREW NUT MOUNT	2
3	WTM01035	BELLOWS MOUNTING BLOCK	1
4	WTM01036	BELLOWS MOUNTING PLATE	6
5	WTM01037	PLATE	2
6	WTM01038	LUBE MANIFOLD	5
8	WTM01039	LUBE MANIFOLD DUST COVER	1
9	WTM01040	X AXIS CASTING	1
10	WTM01041	X AXIS RAIL & BEARING SET	1
11	WTM01042	M5 CAM	14
12	WTM01043	X AXIS LEFT DUST COVER	1
13	WTM01044	X AXIS RIGHT DUST COVER	1
14	WTM01045	OPTICAL SCALE	1
15	WTM01046	BALL SCREW & NUT ASSEMBLY	1
16	WTM01047	X AXIS END PLATE	1
17	WTM01048	X BALL SCREW SUPPORT BEARING	1
18	WTM01049	Y AXIS END PLATE	2
19	WTM01050	X AXIS FEED DIAL	2
20	WTM01051	X AXIS HAND WHEEL	1
21	WTM01052	X AXIS BEARING SLEEVE	2
22	WTM01053	BALLSCREW BEARING	4
23	WTM01054	X AXIS BALLSCREW LOCK NUT	1
24	WTM01055	FOLDING HANDLE	2
25	WTM01056	X & Y AXIS BELLOWS	4
26	WTM01057	Y AXIS CASTING	1
27	WTM01058	Y AXIS LEFT DUST COVER	1
28	WTM01059	Y AXIS RIGHT DUST COVER	1
29	WTM01060	Y AXIS HAND WHEEL	1
30	WTM01061	Y AXIS BEARING SLEEVE	1
31	WTM01062	WASHER	1
32	WTM01063	IDLER SHAFT	1
33	WTM01064	BELT GUARD	1
34	WTM01065	Y AXIS FRONT PLATE	1
35	WTM01066	BUSHING	1
36	WTM01067	ADJUSTING BLOCK	1
37	WTM01068	RIGHT PULLEY	1
38	WTM01069	LEFT PULLEY	1
40	WTM01070	BEARING	1
41	WTM01071	OPTICAL SCALE	1
42	WTM01072	Y AXIS RAIL & BEARING SET	1
43	WTM01073	DUST CAP	1
44	WTM01074	Y AXIS BALLSCREW & NUT	1
45	WTM01075	KEY	1
46	WTM01076	BEARING	1

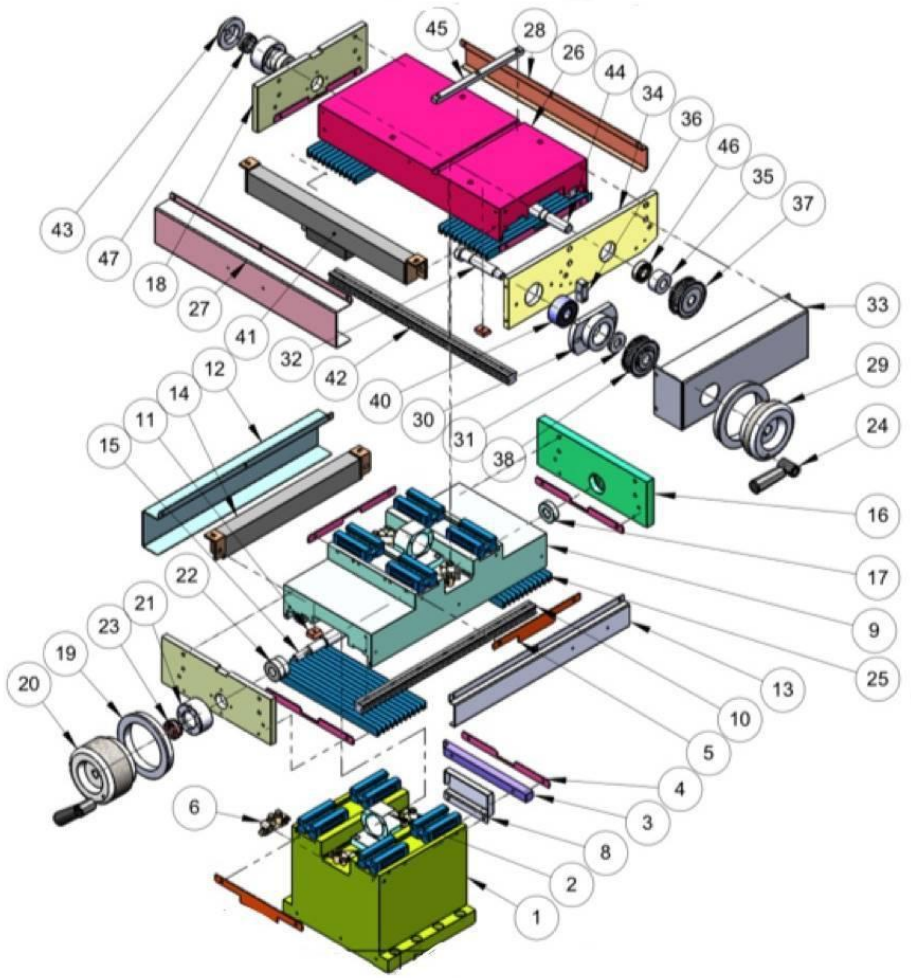

DRAWING NO. 8

ITEM	PART NUMBER	DESCRIPTION	REQ'D
1	WTM01077	SPINDLE MOUNTING CASTING	1
2	WTM01078	BOTTOM SPINDLE MOUNT	1
3	WTM01079	TOP SPINDLE MOUNT	1
4	WTM01080	SPINDLE POSITIONING PLATE	1
5	WTM01081	BELT GUARD	1
6	WTM01082	MOTOR MOUNT PLATE	1
7	WTM01083	MOTOR PULLEY	1
8	WTM01084	MOTOR ADJUSTMENT BLOCK	1
9	WTM01085	KEY	1
11	WTM01086	PARALLEL PLATE	1
12	WTM01087	WORK WHEEL MOTOR	1
13	WTM01088	WORK SPINDLE	1
14	WTM01089	SPINDLE PULLEY	1
17	WTM01090	WHEEL GUARD SECTION 3"	1
18	WTM01091	WHEEL GUARD SECTION 2"	1
19	WTM01092	WHEEL GUARD SECTION 1"	1
20	WTM01093	WHEEL GUARD INSIDE SECTION	1
21	WTM01094	WHEEL GUARD OUTER SECTION	1
22	WTM01095	WHEEL GUARD MOUNT BRACKET	1

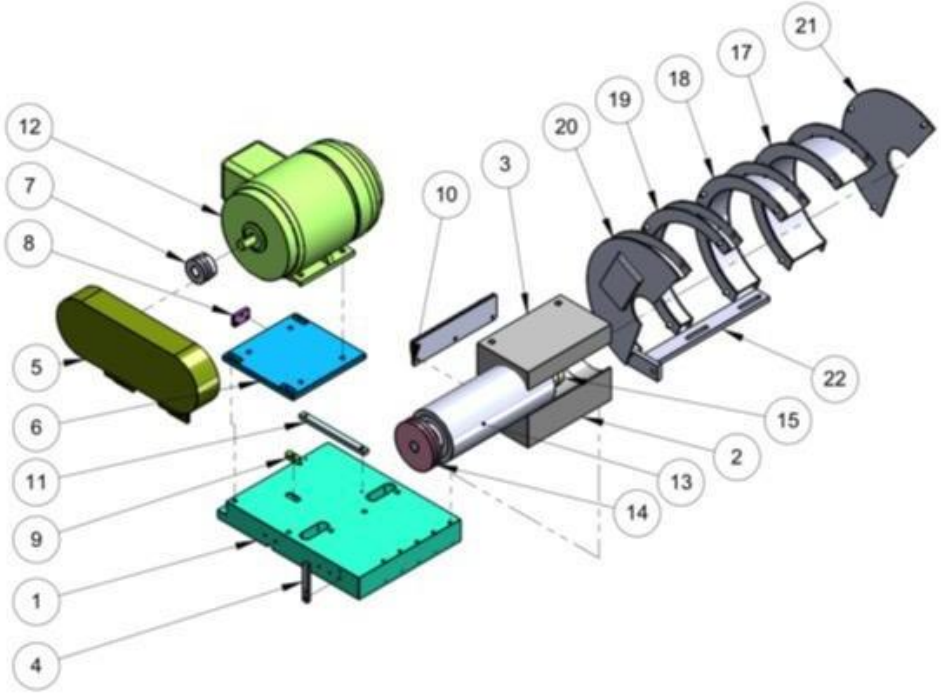

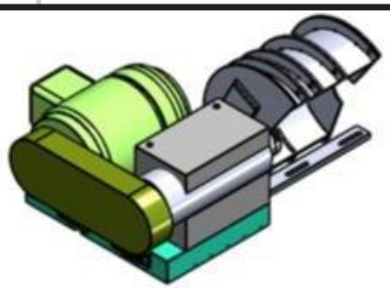

Appendix B: Electrical Schematic

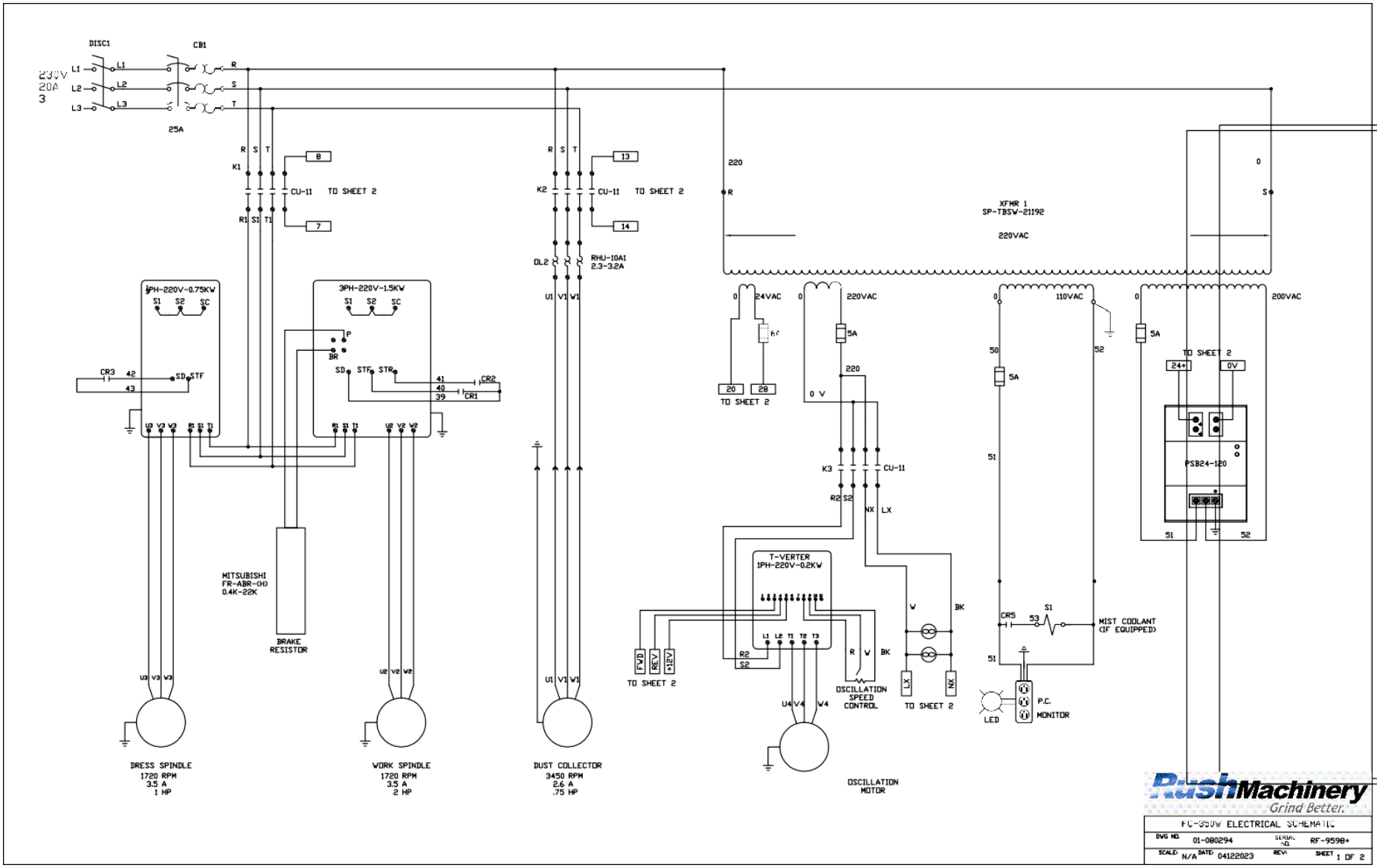

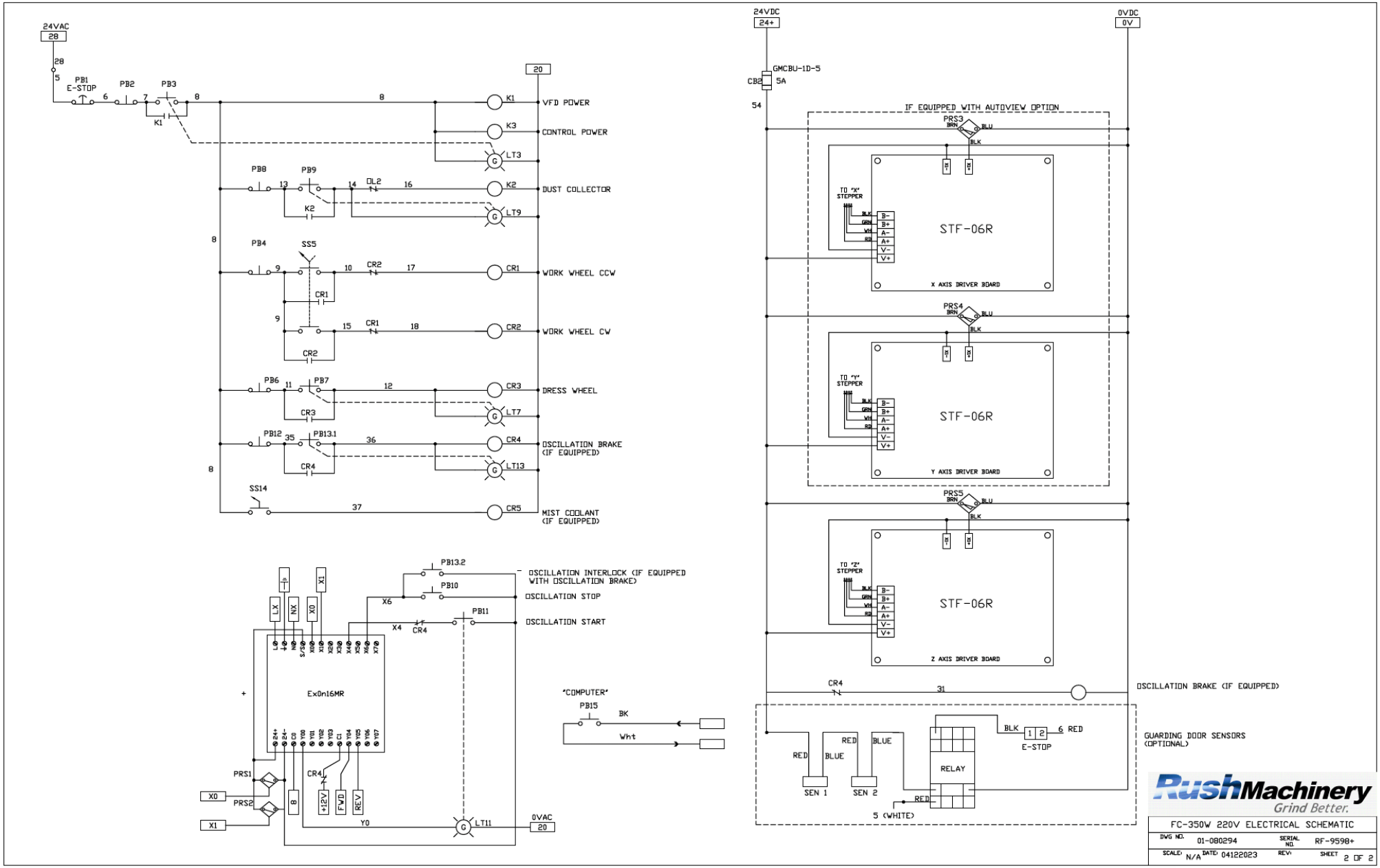
24VAC
28
PB1
E-STOP
PB2
PB3
K1
VFD POWER
K3
CONTROL POWER
LT3
PB8
PB9
K2
DUST COLLECTOR
LT9
PB4
SS5
CR2
CR1
WORK WHEEL CCW
WORK WHEEL CW
PB6
PB7
CR3
DRESS WHEEL
LT7
PB12
PB13.1
CR4
OSCILLATION BRAKE (IF EQUIPPED)
LT13
SS14
CR5
MIST COOLANT (IF EQUIPPED)
20
PB13.2
OSCILLATION INTERLOCK (IF EQUIPPED WITH OSCILLATION BRAKE)
PB10
OSCILLATION STOP
PB11
OSCILLATION START
X6
X4
LX
NX
X0
X1
Ex0n16MR
PRS1
PRS2
+12V
FWD
REV
Y0
LT11
0VAC
"COMPUTER"
PB15
BK
Wht
24VDC
24+
GMCBU-1D-5
CB2
5A
54
IF EQUIPPED WITH AUTOVIEW OPTION
PRS3
BRN
BLU
BLK
TO "X" STEPPER
STF-06R
X AXIS DRIVER BOARD
PRS4
TO "Y" STEPPER
Y AXIS DRIVER BOARD
PRS5
TO "Z" STEPPER
Z AXIS DRIVER BOARD
0VDC
0V
31
OSCILLATION BRAKE (IF EQUIPPED)
GUARDING DOOR SENSORS (OPTIONAL)
RED
BLUE
SEN 1
SEN 2
RELAY
E-STOP
6 RED
5 (WHITE)
RushMachinery
Grind Better.
FC-350W 220V ELECTRICAL SCHEMATIC
DWG NO. 01-080294
SERIAL NO. RF-9598+
SCALE: N/A
DATE: 04122023
REV:
SHEET 2 OF 2

Appendix C: Unidirectional Wheel Speed Chart

Diamond Wheel RPM

225 Millimeter Dressing Wheel RPM

	200	300	400	500	600	700	800	900	1000	1100	1200	1300	1400	1500	1600	1700	1800	1900	2000
50.8	443	664	886																
63.5	354	531	709	886															
76.2	295	443	591	738	886														
88.9	253	380	506	633	759	886													
101.6	221	332	443	554	664	775	886	997											
114.3	197	295	394	492	591	689	787	886	984										
127	177	266	354	443	531	620	709	797	886	974									
139.7	161	242	322	403	483	564	644	725	805	886	966								
152.4	148	221	295	369	443	517	591	664	738	812	886	960							
165.1	136	204	273	341	409	477	545	613	681	750	818	886	954						
177.8	127	190	253	316	380	443	506	569	633	696	759	823	886	949					
190.5	118	177	236	295	354	413	472	531	591	650	709	768	827	886	945				
203.2	111	166	221	277	332	388	443	498	554	609	664	720	775	830	886	941	997		
215.9	104	156	208	261	313	365	417	469	521	573	625	677	730	782	834	886	938	990	
228.6	98	148	197	246	295	344	394	443	492	541	591	640	689	738	787	837	886	935	984
241.3	93	140	186	233	280	326	373	420	466	513	559	606	653	699	746	793	839	886	932
254	89	133	177	221	266	310	354	399	443	487	531	576	620	664	709	753	797	842	886
266.7	84	127	169	211	253	295	337	380	422	464	506	548	591	633	675	717	759	801	844
279.4	81	121	161	201	242	282	322	362	403	443	483	523	564	604	644	685	725	765	805
292.1	77	116	154	193	231	270	308	347	385	424	462	501	539	578	616	655	693	732	770
304.8	74	111	148	185	221	258	295	332	369	406	443	480	517	554	591	627	664	701	738
317.5	71	106	142	177	213	248	283	319	354	390	425	461	496	531	567	602	638	673	709
330.2	68	102	136	170	204	238	273	307	341	375	409	443	477	511	545	579	613	647	681
342.9	66	98	131	164	197	230	262	295	328	361	394	427	459	492	525	558	591	623	656
355.6	63	95	127	158	190	221	253	285	316	348	380	411	443	475	506	538	569	601	633

Diamond Wheel RPM

	250 Millimeter Dressing Wheel RPM																		
	200	300	400	500	600	700	800	900	1000	1100	1200	1300	1400	1500	1600	1700	1800	1900	2000
50.8	492	738	984																
63.5	394	591	787	984															
76.2	328	492	656	820	984														
88.9	281	422	562	703	844	984													
101.6	246	369	492	615	738	861	984												
114.3	219	328	437	547	656	766	875	984											
127	197	295	394	492	591	689	787	886	984										
139.7	179	268	358	447	537	626	716	805	895	984									
152.4	164	246	328	410	492	574	656	738	820	902	984								
165.1	151	227	303	379	454	530	606	681	757	833	909	984							
177.8	141	211	281	352	422	492	562	633	703	773	844	914	984						
190.5	131	197	262	328	394	459	525	591	656	722	787	853	919	984					
203.2	123	185	246	308	369	431	492	554	615	677	738	800	861	923	984				
215.9	116	174	232	289	347	405	463	521	579	637	695	753	811	868	926	984			
228.6	109	164	219	273	328	383	437	492	547	601	656	711	766	820	875	930	984		
241.3	104	155	207	259	311	363	414	466	518	570	622	673	725	777	829	881	932	984	
254	98	148	197	246	295	344	394	443	492	541	591	640	689	738	787	837	886	935	984
266.7	94	141	187	234	281	328	375	422	469	516	562	609	656	703	750	797	844	891	937
279.4	89	134	179	224	268	313	358	403	447	492	537	582	626	671	716	761	805	850	895
292.1	86	128	171	214	257	300	342	385	428	471	514	556	599	642	685	727	770	813	856
304.8	82	123	164	205	246	287	328	369	410	451	492	533	574	615	656	697	738	779	820
317.5	79	118	157	197	236	276	315	354	394	433	472	512	551	591	630	669	709	748	787
330.2	76	114	151	189	227	265	303	341	379	416	454	492	530	568	606	644	681	719	757
342.9	73	109	146	182	219	255	292	328	365	401	437	474	510	547	583	620	656	693	729
355.6	70	105	141	176	211	246	281	316	352	387	422	457	492	527	562	598	633	668	703

Diamond Wheel RPM

200 Millimeter Dressing Wheel RPM

	200	300	400	500	600	700	800	900	1000	1100	1200	1300	1400	1500	1600	1700	1800	1900	2000
50.8	400	600	800	1000															
63.5	320	480	640	800	960														
76.2	267	400	533	667	800	933													
88.9	229	343	457	571	686	800	914												
101.6	200	300	400	500	600	700	800	900	1000										
114.3	178	267	356	444	533	622	711	800	889	978									
127	160	240	320	400	480	560	640	720	800	880	960								
139.7	145	218	291	364	436	509	582	655	727	800	873	945							
152.4	133	200	267	333	400	467	533	600	667	733	800	867	933	1000					
165.1	123	185	246	308	369	431	492	554	615	677	738	800	862	923	985				
177.8	114	171	229	286	343	400	457	514	571	629	686	743	800	857	914	971			
190.5	107	160	213	267	320	373	427	480	533	587	640	693	747	800	853	907	960		
203.2	100	150	200	250	300	350	400	450	500	550	600	650	700	750	800	850	900	950	1000
215.9	94	141	188	235	282	329	376	424	471	518	565	612	659	706	753	800	847	894	941
228.6	89	133	178	222	267	311	356	400	444	489	533	578	622	667	711	756	800	844	889
241.3	84	126	168	211	253	295	337	379	421	463	505	547	589	632	674	716	758	800	842
254	80	120	160	200	240	280	320	360	400	440	480	520	560	600	640	680	720	760	800
266.7	76	114	152	190	229	267	305	343	381	419	457	495	533	571	610	648	686	724	762
279.4	73	109	145	182	218	255	291	327	364	400	436	473	509	545	582	618	655	691	727
292.1	70	104	139	174	209	243	278	313	348	383	417	452	487	522	557	591	626	661	696
304.8	67	100	133	167	200	233	267	300	333	367	400	433	467	500	533	567	600	633	667
317.5	64	96	128	160	192	224	256	288	320	352	384	416	448	480	512	544	576	608	640
330.2	62	92	123	154	185	215	246	277	308	338	369	400	431	462	492	523	554	585	615
342.9	59	89	119	148	178	207	237	267	296	326	356	385	415	444	474	504	533	563	593
355.6	57	86	114	143	171	200	229	257	286	314	343	371	400	429	457	486	514	543	571

Diamond Wheel RPM

175 Millimeter Dressing Wheel RPM

	200	300	400	500	600	700	800	900	1000	1100	1200	1300	1400	1500	1600	1700	1800	1900	2000
50.8	350	525	700	875															
63.5	280	420	560	700	840	980													
76.2	233	350	467	583	700	817	933												
88.9	200	300	400	500	600	700	800	900	1000										
101.6	175	263	350	438	525	613	700	788	875	963									
114.3	156	233	311	389	467	544	622	700	778	856	933								
127	140	210	280	350	420	490	560	630	700	770	840	910	980						
139.7	127	191	255	318	382	445	509	573	636	700	764	827	891	955					
152.4	117	175	233	292	350	408	467	525	583	642	700	758	817	875	933	992			
165.1	108	162	215	269	323	377	431	485	538	592	646	700	754	808	862	915	969		
177.8	100	150	200	250	300	350	400	450	500	550	600	650	700	750	800	850	900	950	1000
190.5	93	140	187	233	280	327	373	420	467	513	560	607	653	700	747	793	840	887	933
203.2	88	131	175	219	263	306	350	394	438	481	525	569	613	656	700	744	788	831	875
215.9	82	124	165	206	247	288	329	371	412	453	494	535	576	618	659	700	741	782	824
228.6	78	117	156	194	233	272	311	350	389	428	467	506	544	583	622	661	700	739	778
241.3	74	111	147	184	221	258	295	332	368	405	442	479	516	553	589	626	663	700	737
254	70	105	140	175	210	245	280	315	350	385	420	455	490	525	560	595	630	665	700
266.7	67	100	133	167	200	233	267	300	333	367	400	433	467	500	533	567	600	633	667
279.4	64	95	127	159	191	223	255	286	318	350	382	414	445	477	509	541	573	605	636
292.1	61	91	122	152	183	213	243	274	304	335	365	396	426	457	487	517	548	578	609
304.8	58	88	117	146	175	204	233	263	292	321	350	379	408	438	467	496	525	554	583
317.5	56	84	112	140	168	196	224	252	280	308	336	364	392	420	448	476	504	532	560
330.2	54	81	108	135	162	188	215	242	269	296	323	350	377	404	431	458	485	512	538
342.9	52	78	104	130	156	181	207	233	259	285	311	337	363	389	415	441	467	493	519
355.6	50	75	100	125	150	175	200	225	250	275	300	325	350	375	400	425	450	475	500

Diamond Wheel RPM

150 Millimeter Dressing Wheel RPM

	200	300	400	500	600	700	800	900	1000	1100	1200	1300	1400	1500	1600	1700	1800	1900	2000
50.8	300	450	600	750	900														
63.5	240	360	480	600	720	840	960												
76.2	200	300	400	500	600	700	800	900	1000										
88.9	171	257	343	429	514	600	686	771	857	943									
101.6	150	225	300	375	450	525	600	675	750	825	900	975							
114.3	133	200	267	333	400	467	533	600	667	733	800	867	933	1000					
127	120	180	240	300	360	420	480	540	600	660	720	780	840	900	960				
139.7	109	164	218	273	327	382	436	491	545	600	655	709	764	818	873	927	982		
152.4	100	150	200	250	300	350	400	450	500	550	600	650	700	750	800	850	900	950	1000
165.1	92	138	185	231	277	323	369	415	462	508	554	600	646	692	738	785	831	877	923
177.8	86	129	171	214	257	300	343	386	429	471	514	557	600	643	686	729	771	814	857
190.5	80	120	160	200	240	280	320	360	400	440	480	520	560	600	640	680	720	760	800
203.2	75	113	150	188	225	263	300	338	375	413	450	488	525	563	600	638	675	713	750
215.9	71	106	141	176	212	247	282	318	353	388	424	459	494	529	565	600	635	671	706
228.6	67	100	133	167	200	233	267	300	333	367	400	433	467	500	533	567	600	633	667
241.3	63	95	126	158	189	221	253	284	316	347	379	411	442	474	505	537	568	600	632
254	60	90	120	150	180	210	240	270	300	330	360	390	420	450	480	510	540	570	600
266.7	57	86	114	143	171	200	229	257	286	314	343	371	400	429	457	486	514	543	571
279.4	55	82	109	136	164	191	218	245	273	300	327	355	382	409	436	464	491	518	545
292.1	52	78	104	130	157	183	209	235	261	287	313	339	365	391	417	443	470	496	522
304.8	50	75	100	125	150	175	200	225	250	275	300	325	350	375	400	425	450	475	500
317.5	48	72	96	120	144	168	192	216	240	264	288	312	336	360	384	408	432	456	480
330.2	46	69	92	115	138	162	185	208	231	254	277	300	323	346	369	392	415	438	462
342.9	44	67	89	111	133	156	178	200	222	244	267	289	311	333	356	378	400	422	444
355.6	43	64	86	107	129	150	171	193	214	236	257	279	300	321	343	364	386	407	429

Diamond Wheel RPM

Diamond Wheel Size	10 Inch Dressing Wheel RPM																		
	200	**300**	**400**	**500**	**600**	**700**	**800**	**900**	**1000**	**1100**	**1200**	**1300**	**1400**	**1500**	**1600**	**1700**	**1800**	**1900**	**2000**
2.0	500	750	1000																
2.5	400	600	800	1000															
3.0	333	500	667	833	1000														
3.5	286	429	571	714	857	1000													
4.0	250	375	500	625	750	875	1000												
4.5	222	333	444	556	667	778	889	1000											
5.0	200	300	400	500	600	700	800	900	1000										
5.5	182	273	364	455	545	636	727	818	909	1000									
6.0	167	250	333	417	500	583	667	750	833	917	1000								
6.5	154	231	308	385	462	538	615	692	769	846	923	1000							
7.0	143	214	286	357	429	500	571	643	714	786	857	929	1000						
7.5	133	200	267	333	400	467	533	600	667	733	800	867	933	1000					
8.0	125	188	250	313	375	438	500	563	625	688	750	813	875	938	1000				
8.5	118	176	235	294	353	412	471	529	588	647	706	765	824	882	941	1000			
9.0	111	167	222	278	333	389	444	500	556	611	667	722	778	833	889	944	1000		
9.5	105	158	211	263	316	368	421	474	526	579	632	684	737	789	842	895	947	1000	
10.0	100	150	200	250	300	350	400	450	500	550	600	650	700	750	800	850	900	950	1000
10.5	95	143	190	238	286	333	381	429	476	524	571	619	667	714	762	810	857	905	952
11.0	91	136	182	227	273	318	364	409	455	500	545	591	636	682	727	773	818	864	909
11.5	87	130	174	217	261	304	348	391	435	478	522	565	609	652	696	739	783	826	870
12.0	83	125	167	208	250	292	333	375	417	458	500	542	583	625	667	708	750	792	833
12.5	80	120	160	200	240	280	320	360	400	440	480	520	560	600	640	680	720	760	800
13.0	77	115	154	192	231	269	308	346	385	423	462	500	538	577	615	654	692	731	769
13.5	74	111	148	185	222	259	296	333	370	407	444	481	519	556	593	630	667	704	741
14.0	71	107	143	179	214	250	286	321	357	393	429	464	500	536	571	607	643	679	714

Diamond Wheel RPM

Diamond Wheel Size	9 Inch Dressing Wheel RPM																		
	200	300	400	500	600	700	800	900	1000	1100	1200	1300	1400	1500	1600	1700	1800	1900	2000
2.0	450	675	900																
2.5	360	540	720	900															
3.0	300	450	600	750	900														
3.5	257	386	514	643	771	900													
4.0	225	338	450	563	675	788	900												
4.5	200	300	400	500	600	700	800	900	1000										
5.0	180	270	360	450	540	630	720	810	900	990									
5.5	164	245	327	409	491	573	655	736	818	900	982								
6.0	150	225	300	375	450	525	600	675	750	825	900	975							
6.5	138	208	277	346	415	485	554	623	692	762	831	900	969						
7.0	129	193	257	321	386	450	514	579	643	707	771	836	900	964					
7.5	120	180	240	300	360	420	480	540	600	660	720	780	840	900	960				
8.0	113	169	225	281	338	394	450	506	563	619	675	731	788	844	900	956			
8.5	106	159	212	265	318	371	424	476	529	582	635	688	741	794	847	900	953		
9.0	100	150	200	250	300	350	400	450	500	550	600	650	700	750	800	850	900	950	1000
9.5	95	142	189	237	284	332	379	426	474	521	568	616	663	711	758	805	853	900	947
10.0	90	135	180	225	270	315	360	405	450	495	540	585	630	675	720	765	810	855	900
10.5	86	129	171	214	257	300	343	386	429	471	514	557	600	643	686	729	771	814	857
11.0	82	123	164	205	245	286	327	368	409	450	491	532	573	614	655	695	736	777	818
11.5	78	117	157	196	235	274	313	352	391	430	470	509	548	587	626	665	704	743	783
12.0	75	113	150	188	225	263	300	338	375	413	450	488	525	563	600	638	675	713	750
12.5	72	108	144	180	216	252	288	324	360	396	432	468	504	540	576	612	648	684	720
13.0	69	104	138	173	208	242	277	312	346	381	415	450	485	519	554	588	623	658	692
13.5	67	100	133	167	200	233	267	300	333	367	400	433	467	500	533	567	600	633	667
14.0	64	96	129	161	193	225	257	289	321	354	386	418	450	482	514	546	579	611	643

Diamond Wheel RPM

Diamond Wheel Size	8 Inch Dressing Wheel RPM																		
	200	300	400	500	600	700	800	900	1000	1100	1200	1300	1400	1500	1600	1700	1800	1900	2000
2.0	400	600	800	1000															
2.5	320	480	640	800	960														
3.0	267	400	533	667	800	933													
3.5	229	343	457	571	686	800	914												
4.0	200	300	400	500	600	700	800	900	1000										
4.5	178	267	356	444	533	622	711	800	889	978									
5.0	160	240	320	400	480	560	640	720	800	880	960								
5.5	145	218	291	364	436	509	582	655	727	800	873	945							
6.0	133	200	267	333	400	467	533	600	667	733	800	867	933	1000					
6.5	123	185	246	308	369	431	492	554	615	677	738	800	862	923	985				
7.0	114	171	229	286	343	400	457	514	571	629	686	743	800	857	914	971			
7.5	107	160	213	267	320	373	427	480	533	587	640	693	747	800	853	907	960		
8.0	100	150	200	250	300	350	400	450	500	550	600	650	700	750	800	850	900	950	1000
8.5	94	141	188	235	282	329	376	424	471	518	565	612	659	706	753	800	847	894	941
9.0	89	133	178	222	267	311	356	400	444	489	533	578	622	667	711	756	800	844	889
9.5	84	126	168	211	253	295	337	379	421	463	505	547	589	632	674	716	758	800	842
10.0	80	120	160	200	240	280	320	360	400	440	480	520	560	600	640	680	720	760	800
10.5	76	114	152	190	229	267	305	343	381	419	457	495	533	571	610	648	686	724	762
11.0	73	109	145	182	218	255	291	327	364	400	436	473	509	545	582	618	655	691	727
11.5	70	104	139	174	209	243	278	313	348	383	417	452	487	522	557	591	626	661	696
12.0	67	100	133	167	200	233	267	300	333	367	400	433	467	500	533	567	600	633	667
12.5	64	96	128	160	192	224	256	288	320	352	384	416	448	480	512	544	576	608	640
13.0	62	92	123	154	185	215	246	277	308	338	369	400	431	462	492	523	554	585	615
13.5	59	89	119	148	178	207	237	267	296	326	356	385	415	444	474	504	533	563	593
14.0	57	86	114	143	171	200	229	257	286	314	343	371	400	429	457	486	514	543	571

Diamond Wheel RPM

Diamond Wheel Size	7 Inch Dressing Wheel RPM																		
	200	300	400	500	600	700	800	900	1000	1100	1200	1300	1400	1500	1600	1700	1800	1900	2000
2.0	350	525	700	875															
2.5	280	420	560	700	840	980													
3.0	233	350	467	583	700	817	933												
3.5	200	300	400	500	600	700	800	900	1000										
4.0	175	263	350	438	525	613	700	788	875	963									
4.5	156	233	311	389	467	544	622	700	778	856	933								
5.0	140	210	280	350	420	490	560	630	700	770	840	910	980						
5.5	127	191	255	318	382	445	509	573	636	700	764	827	891	955					
6.0	117	175	233	292	350	408	467	525	583	642	700	758	817	875	933	992			
6.5	108	162	215	269	323	377	431	485	538	592	646	700	754	808	862	915	969		
7.0	100	150	200	250	300	350	400	450	500	550	600	650	700	750	800	850	900	950	1000
7.5	93	140	187	233	280	327	373	420	467	513	560	607	653	700	747	793	840	887	933
8.0	88	131	175	219	263	306	350	394	438	481	525	569	613	656	700	744	788	831	875
8.5	82	124	165	206	247	288	329	371	412	453	494	535	576	618	659	700	741	782	824
9.0	78	117	156	194	233	272	311	350	389	428	467	506	544	583	622	661	700	739	778
9.5	74	111	147	184	221	258	295	332	368	405	442	479	516	553	589	626	663	700	737
10.0	70	105	140	175	210	245	280	315	350	385	420	455	490	525	560	595	630	665	700
10.5	67	100	133	167	200	233	267	300	333	367	400	433	467	500	533	567	600	633	667
11.0	64	95	127	159	191	223	255	286	318	350	382	414	445	477	509	541	573	605	636
11.5	61	91	122	152	183	213	243	274	304	335	365	396	426	457	487	517	548	578	609
12.0	58	88	117	146	175	204	233	263	292	321	350	379	408	438	467	496	525	554	583
12.5	56	84	112	140	168	196	224	252	280	308	336	364	392	420	448	476	504	532	560
13.0	54	81	108	135	162	188	215	242	269	296	323	350	377	404	431	458	485	512	538
13.5	52	78	104	130	156	181	207	233	259	285	311	337	363	389	415	441	467	493	519
14.0	50	75	100	125	150	175	200	225	250	275	300	325	350	375	400	425	450	475	500

Diamond Wheel RPM

Diamond Wheel Size	6 Inch Dressing Wheel RPM																		
	200	300	400	500	600	700	800	900	1000	1100	1200	1300	1400	1500	1600	1700	1800	1900	2000
2.0	300	450	600	750	900														
2.5	240	360	480	600	720	840	960												
3.0	200	300	400	500	600	700	800	900	1000										
3.5	171	257	343	429	514	600	686	771	857	943									
4.0	150	225	300	375	450	525	600	675	750	825	900	975							
4.5	133	200	267	333	400	467	533	600	667	733	800	867	933	1000					
5.0	120	180	240	300	360	420	480	540	600	660	720	780	840	900	960				
5.5	109	164	218	273	327	382	436	491	545	600	655	709	764	818	873	927	982		
6.0	100	150	200	250	300	350	400	450	500	550	600	650	700	750	800	850	900	950	1000
6.5	92	138	185	231	277	323	369	415	462	508	554	600	646	692	738	785	831	877	923
7.0	86	129	171	214	257	300	343	386	429	471	514	557	600	643	686	729	771	814	857
7.5	80	120	160	200	240	280	320	360	400	440	480	520	560	600	640	680	720	760	800
8.0	75	113	150	188	225	263	300	338	375	413	450	488	525	563	600	638	675	713	750
8.5	71	106	141	176	212	247	282	318	353	388	424	459	494	529	565	600	635	671	706
9.0	67	100	133	167	200	233	267	300	333	367	400	433	467	500	533	567	600	633	667
9.5	63	95	126	158	189	221	253	284	316	347	379	411	442	474	505	537	568	600	632
10.0	60	90	120	150	180	210	240	270	300	330	360	390	420	450	480	510	540	570	600
10.5	57	86	114	143	171	200	229	257	286	314	343	371	400	429	457	486	514	543	571
11.0	55	82	109	136	164	191	218	245	273	300	327	355	382	409	436	464	491	518	545
11.5	52	78	104	130	157	183	209	235	261	287	313	339	365	391	417	443	470	496	522
12.0	50	75	100	125	150	175	200	225	250	275	300	325	350	375	400	425	450	475	500
12.5	48	72	96	120	144	168	192	216	240	264	288	312	336	360	384	408	432	456	480
13.0	46	69	92	115	138	162	185	208	231	254	277	300	323	346	369	392	415	438	462
13.5	44	67	89	111	133	156	178	200	222	244	267	289	311	333	356	378	400	422	444
14.0	43	64	86	107	129	150	171	193	214	236	257	279	300	321	343	364	386	407	429

Appendix D: Optional Accessories

D.1 Adapters and Spindles

 WTM09001	**ISO40 to 3” TPF Spindle (Sopko) with 1” opening** **Fits these models:** Exaclibur E60, Harig, Parker-Majestic, Tru Tech: Revolution Revolution Auto, TT-8000, TT-8500, TT-9000, Unison: FGS Series
 WTM09002	Adapter, HSK50A/C to 3" TPF Spindle (Sopko) w/ 1" Opening
 WTM09003	Adapter, ISO40 to 4.5" TPF Spindle (Cincinnati #2) w/0.87" Opening
 WTM09005	Adapter, ISO40 to 7.5" TPF Spindle
 WTM09006	Adapter, HSK50A/C to 7.5" TPF Spindle

 WTM09007	Adapter, ISO40 To ANCA Taper Spindle (TG7/DM7)
 WTM09008	Adapter, HSK50A/C to ANCA TG7 Spindle
 WTM09009	Adapter, ISO40 to Schneeberger Spindle
 WTM09010	Adapter, HSK50A/C to Schneeberger Spindle
 WTM09011	**ISO40 to Walter Power Spindle** **Fits these models:** Mini Power, Power 400, Power 500, Power Basic
 WTM09012	Adapter, HSK50A/C to Walter Power Spindle

 WTM09014	Adapter, ISO40 to ANCA Small Taper Spindle (GX7/MG7/MGX/RG7/RGX/RX7)
 WTM09025	Adapter, ISO40 to HSK32E(HSK40F/FX7) Spindle
 WTM09027	Adapter, ISO40 to HSK40A/C Spindle
 WTM09036	Adapter, ISO40 to HSK40E / HSK50F Spindle
 WTM09051	**ISO40 to Rollomatic Perfect Arbor** **Fits these models:** 620, 528XS, 6000XL, 600X, 628Xi, 628XS, Nano 5, Nano 6, NP4, NP5, NP50, RPG
 WTM09052	Adapter, ISO50 Taper to ISO40 Taper, (M16 Thread)

 WTM09061	Adapter, ISO40 to HSK32E / HSK40F Spindle (ANCA Fastgrind - M8 screw in)
 WTM09064	Adapter, ISO40 to Monoset Spindle
 WTM09070	Adapter, ISO40 to 63mm/1:10 Taper Spindle
 WTM09117	Adapter, ISO40 to Makino/Kao Ming 18 deg. 54MIN Included Angle Taper
 WTM09185	Adapter, ISO40 to ANCA CPX
 WTM 01001	**ISO40 Wheel Spindle** This spindle has a #40 taper and is equivalent to BT40, SK40, and ISO40. The addition of an Imperial draw bar lets it accommodate CAT40 adapters, arbors and tool holders. Without any adapter, the spindle supports arbors for these models: ANCA: SBG, TapX, TX Cell, TX7, TX7+, TX7 Linear, Unison: FGS Series

 WTM01000	HSK 50 A/C
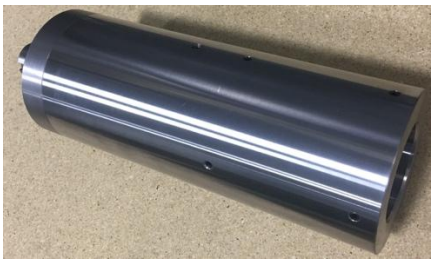 WTM01112	Rollomatic Spindle Sleeve and Drive Assembly
 WTM01118	HSK40C spindle

D.2 Dust Collection System

WTM07001

Includes the following features:

- ¾ hp TEFC motor with electrical cord and connector to match Rush Wheel Dresser
- Dust collection bin capacity of 3.4 cu. ft.
- 200cfm capacity at 5.3” external static pressure
- Primary filtration – Cyclone
- Secondary filtration – Fiberglass filter media
- Fiberglass filter area: 3.3 sq. ft.
- Manual shaker mechanism to remove accumulated dust from fiberglass media
- Inlet port: 5” (5” to 3” adapter included)
- Outlet port: Filter media
- Three phase, 230 volt, 60 Hz electrics
- Replaceable air exhaust filter
- Dimensions: 30” wide x 24” deep x 42” high

D.3 On-Machine Balancing Kit

WBM03040

For balancing wheels on your truer or grinding machine. Essential for precision applications. Includes the following:

- WBM03011: BTM150M Balacing Electronics: 1 plane balancing, with detailed instructions
- WBM03013: Vibration Sensor, 25mm Dia., 4 way, 3m cable
- WBM03015: Speed Sensor, magnetic, includes 5mm cable
- WBM03016-1: Magnet, 6x2mm, for Speed Sensor (1pc)
- WBM03045: Magnetic Base with universal articulating arm

D.4 Wheel Guarding

Four clear acrylic pivoting sections allow for easy access. Sections must be closed for the machine to operate. Retrofit available, performed by a Rush service engineer.

WTM07069